TEP SR-225 'B' MANHOLE

6'-0" X 12'-0" X 7'-0" I.D.

DWG. # SR-225 "B"

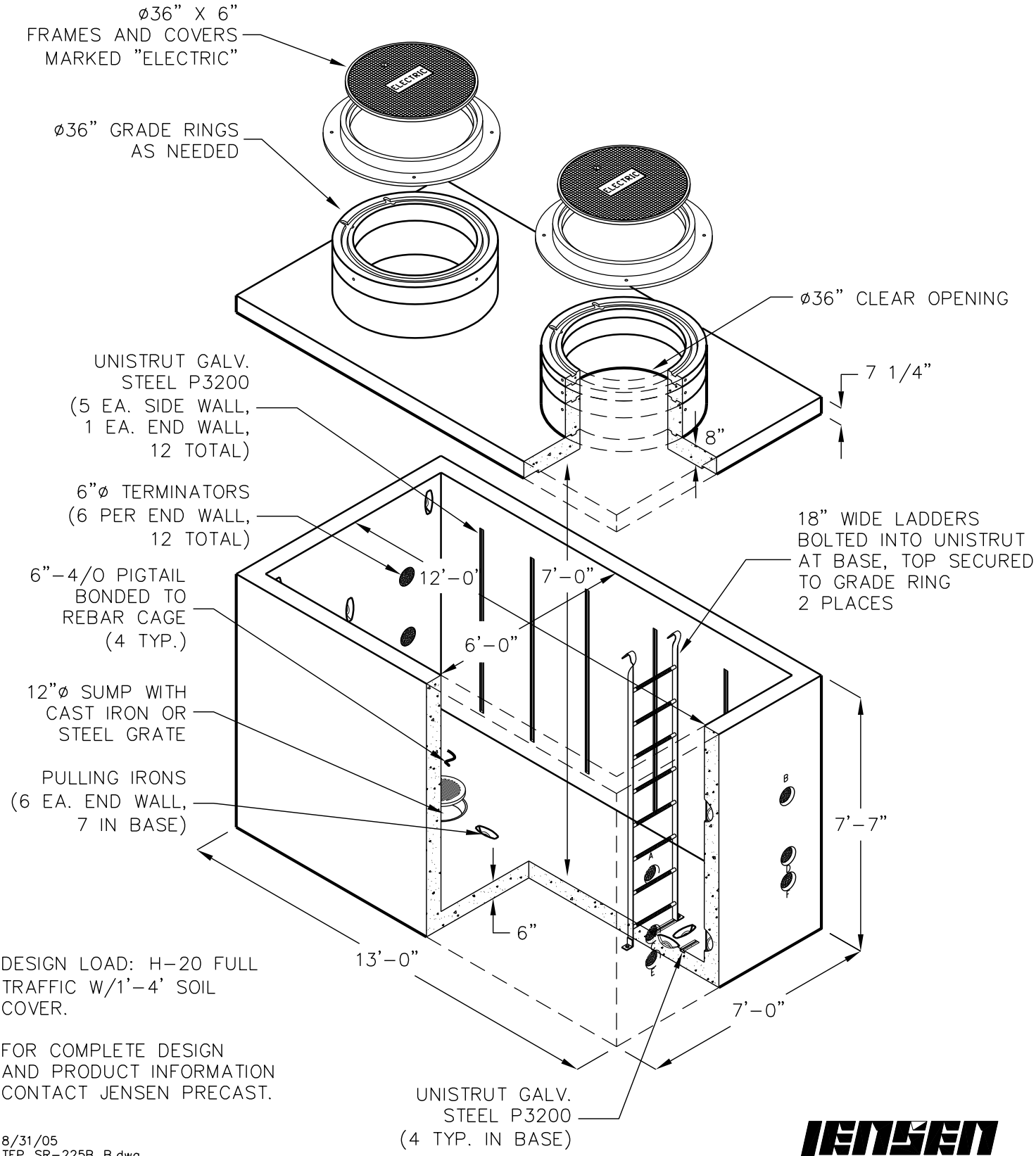

DESIGN LOAD: H-20 FULL TRAFFIC W/1'-4' SOIL COVER.

FOR COMPLETE DESIGN AND PRODUCT INFORMATION CONTACT JENSEN PRECAST.

8/31/05
TEP_SR-225B_B.dwg

© 2005 Jensen Precast