UM1-5C-2
PAD ASSEMBLEY
90" X 96" X 8"

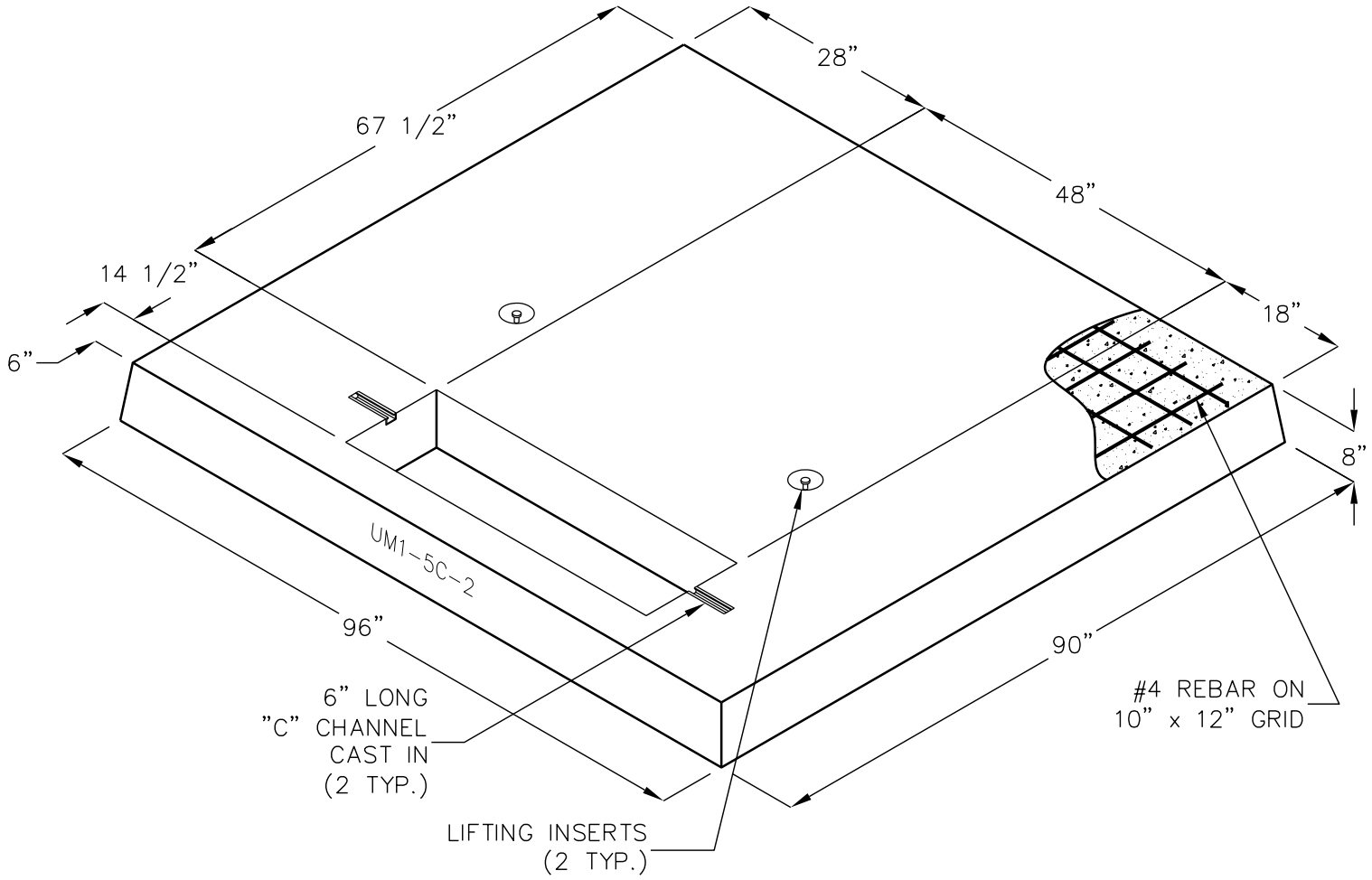

FOR COMPLETE DESIGN
AND PRODUCT INFORMATION
CONTACT JENSEN PRECAST.

3/31/04
UM1-5C-2 Pad Assembly.dwg
© 2004 Jensen Precast

JENSEN PRECAST®