UM1-5C-5
PAD ASSEMBLY

42" X 42" X 6"
OPD 4242 PAD

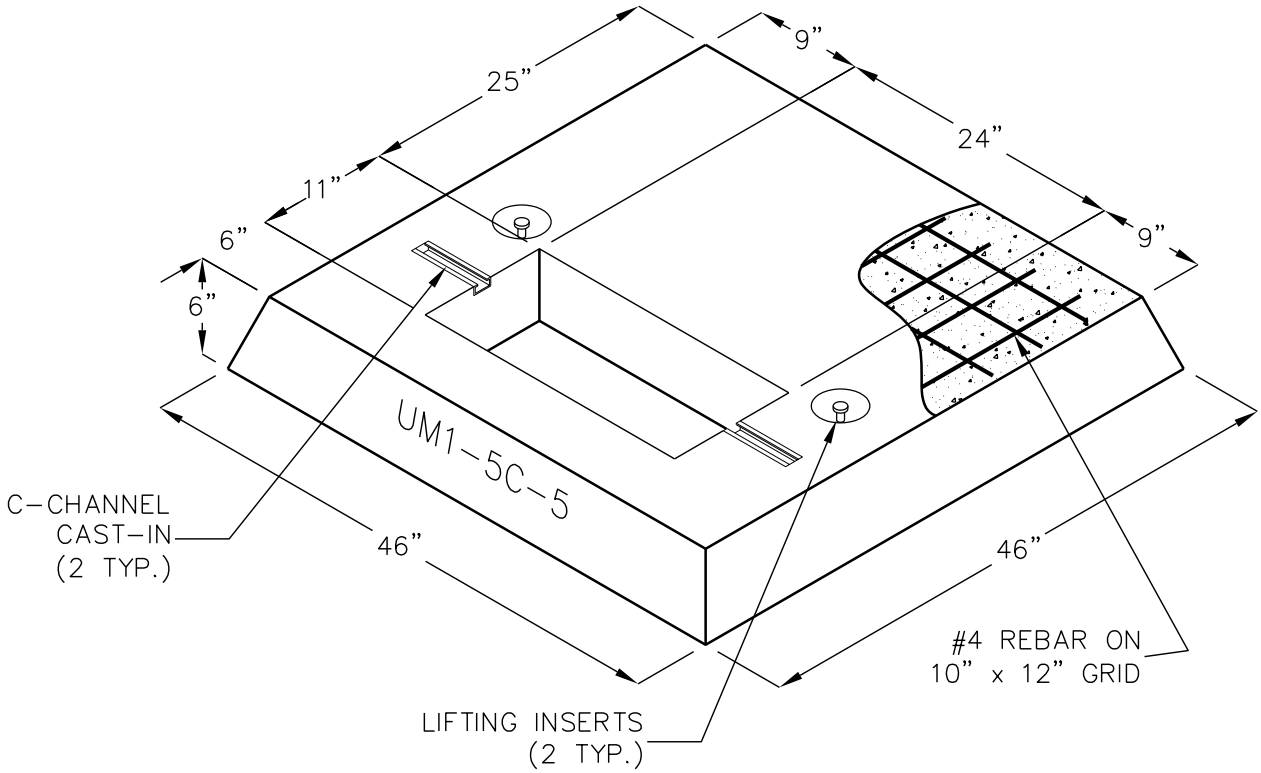

FOR COMPLETE DESIGN
AND PRODUCT INFORMATION
CONTACT JENSEN PRECAST.

3/31/04
UM1-5C-5 Pad Assembly.dwg
© 2004 Jensen Precast

JENSEN PRECAST®