TRANSFORMER PAD
MODEL RP115115

ROSEVILLE ELECTRIC
3 PHASE TRANSFORMER
1500/2500 KVA

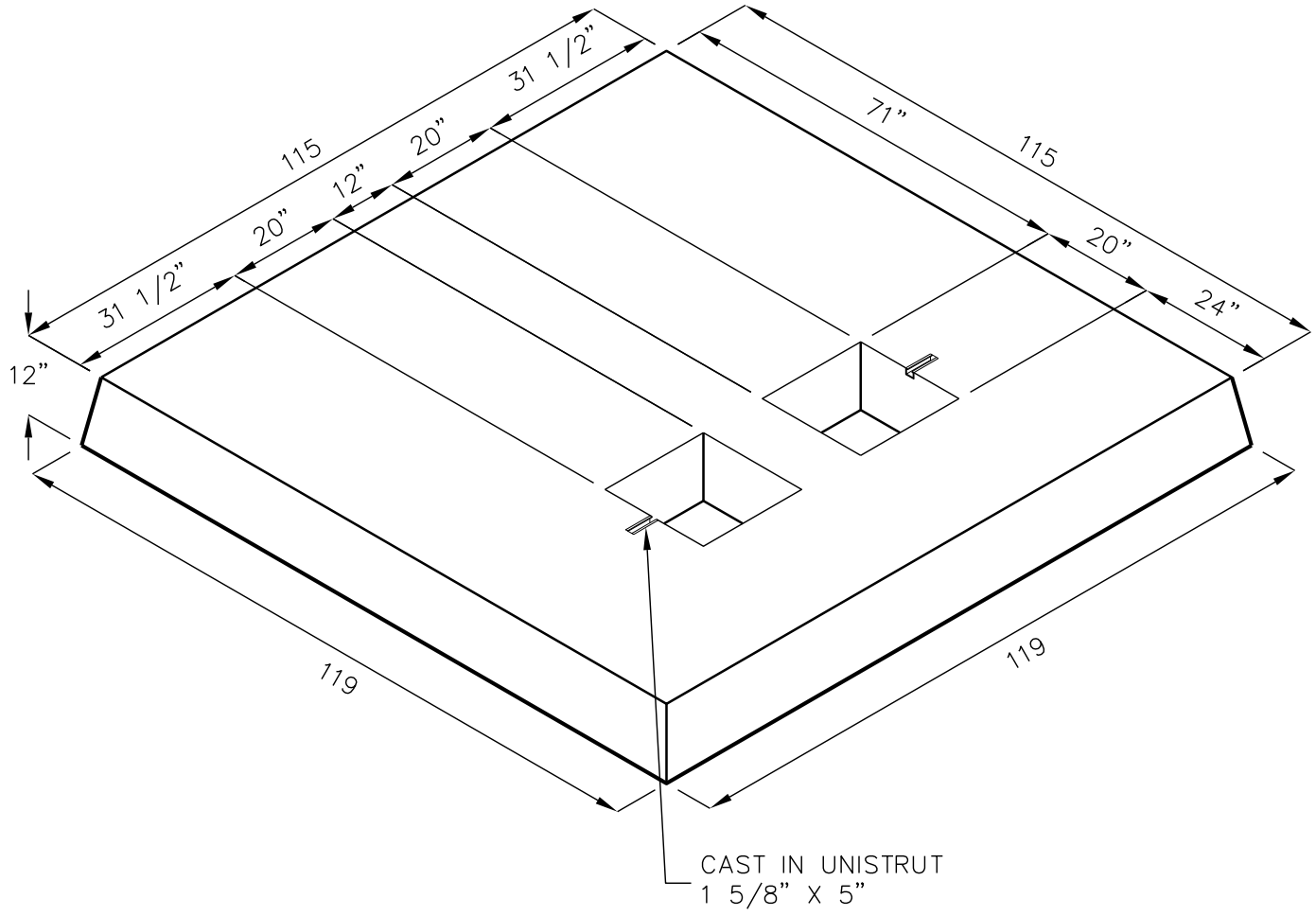

APPROX. WEIGHT:
14,050 LBS.

FOR COMPLETE DESIGN AND
PRODUCT INFORMATION,
CONTACT JENSEN PRECAST.

11/27/01
RP115115.dwg
© 2001 Jensen Precast

JENSEN PRECAST®