72" I.D.
PUMP/LIFT STATION

LAYOUT FOR SIMPLEX OR DUPLEX SYSTEM

Complete the charts below to provide information about your pump station. Return this sheet to your Jensen Precast sales representative for assistance.

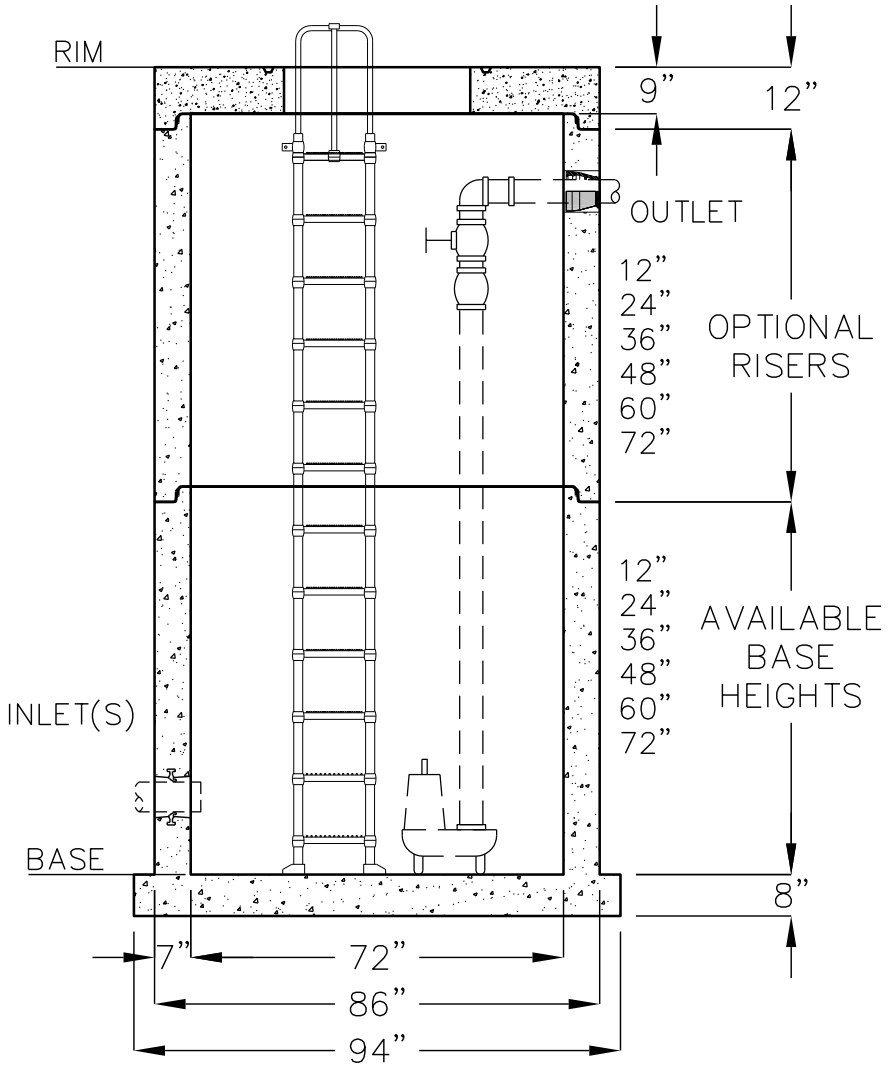

PUMP STATION OPTIONS

HATCH
HATCH CLEAR OPENING _____"

HATCH MATERIAL:
☐ ALUMINUM
☐ GALVANIZED STEEL

DESIGN LOAD:
☐ PEDESTRIAN
☐ INCIDENTAL TRAFFIC
☐ FULL TRAFFIC

HATCH STYLE:
☐ WATER RESISTANT
☐ WATER TIGHT

PUMP/LIFT STATION
PIPE CONNECTOR(S):
☐ FLEXIBLE RESILIENT WATERTIGHT CONNECTOR
☐ OTHER

LADDER/STEPS:
☐ LADDER
☐ MANHOLE STEPS
☐ OTHER_____
☐ NONE

LINER:
☐ YES
☐ NO

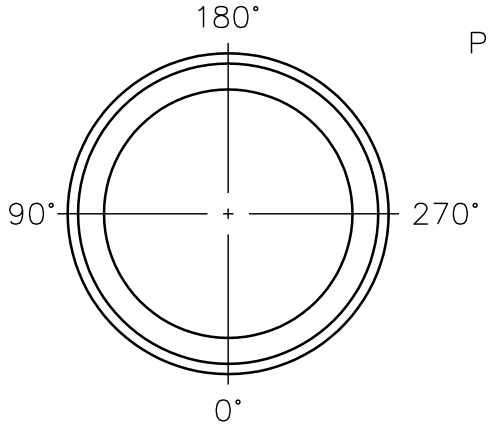

PIPE PENETRATIONS, OPENING SIZES AND LOCATIONS

	ANGLE	PIPE SIZE	PIPE TYPE	ELEVATION
INLET 1				
INLET 2				
OUTLET				
VENT				
ELECTRICAL				
OTHER				

6/20/05
72" Dia Pump Station_Layout_B.dwg
© 2005 Jensen Precast

JENSEN PRECAST®