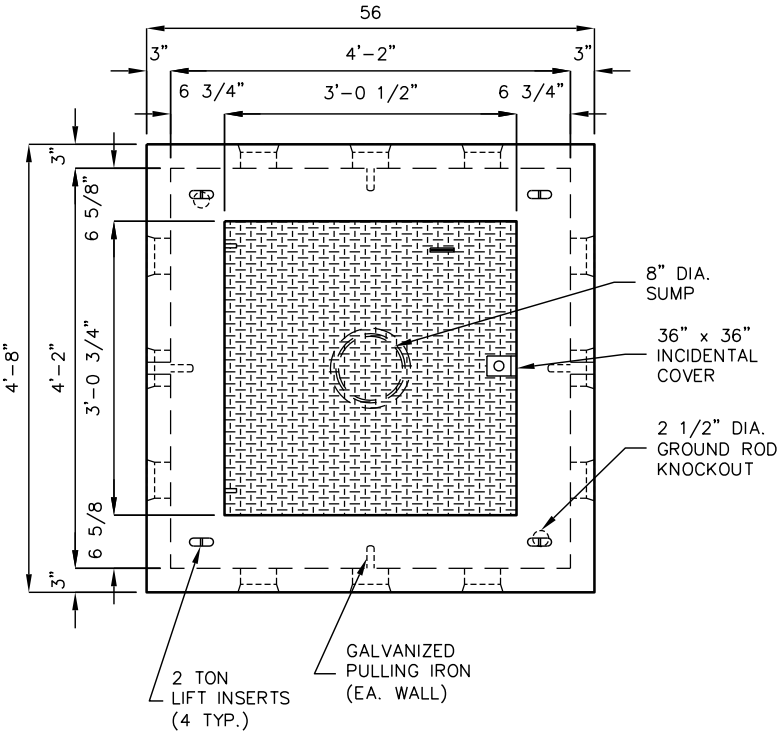

TOP VIEW

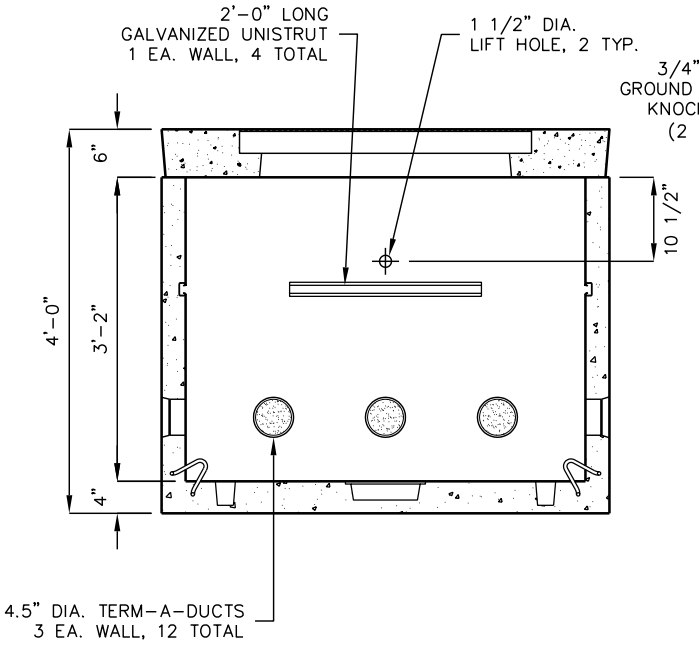

TYPICAL SIDE VIEW

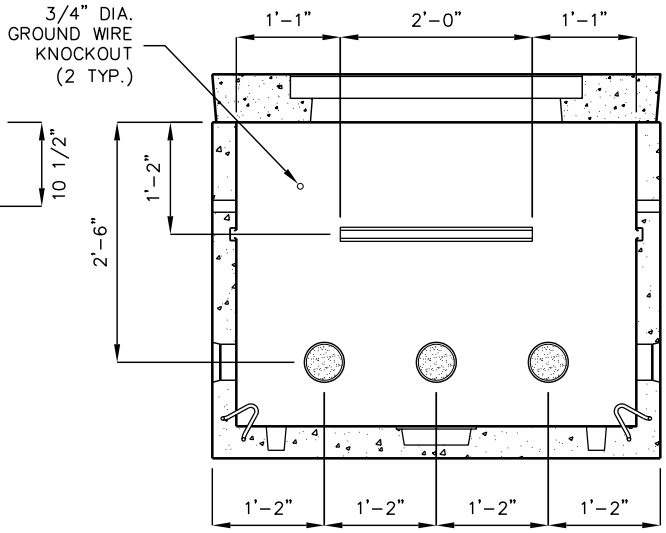

TYPICAL END VIEW

12/08/03
PPL504T_55332_bk.dwg
© 2002 Jensen Precast