2500 GALLON GREASE INTERCEPTOR

MODEL JZ2500EE-G

ACCEPTED BY UPC®

SIDE VIEW
CUTAWAY

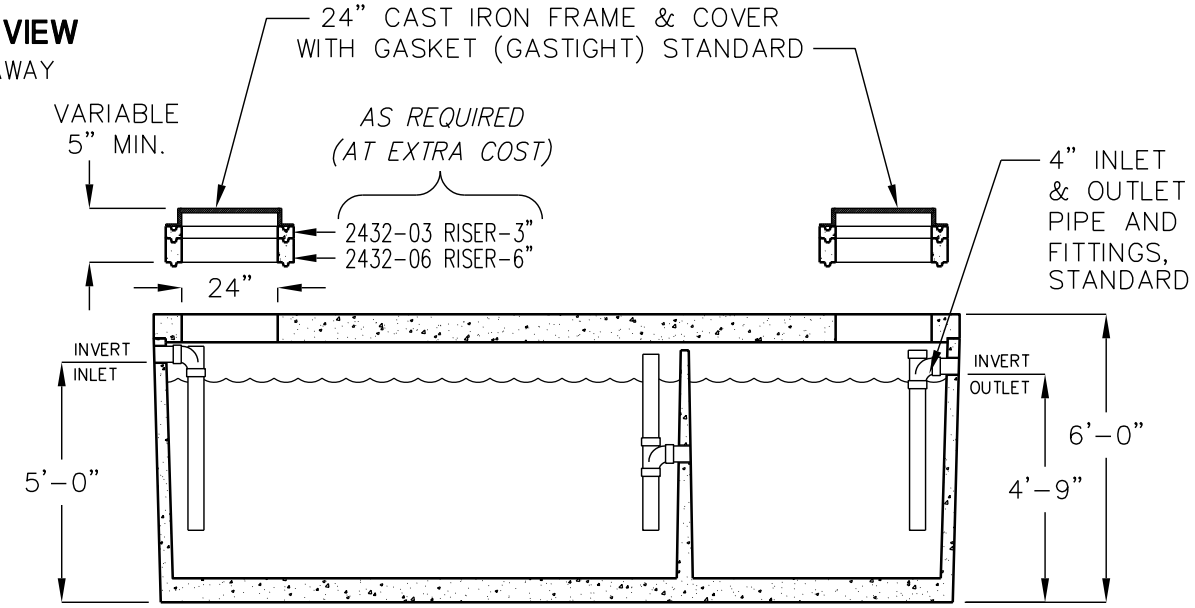

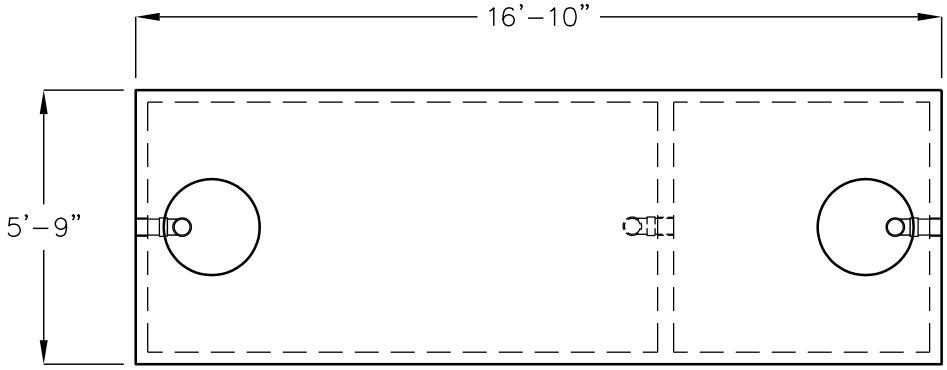

TOP VIEW
(COVERS REMOVED)

LIQUID CAPACITY: 2,500 GALLONS.

BOX DESIGN LOAD: H-20 TRAFFIC FROM 1' TO 5' OF SOIL COVER.

FOR COMPLETE DESIGN AND PRODUCT INFORMATION CONTACT JENSEN PRECAST.

9/23/02
2500G_JZ.dwg
© 2002 Jensen Precast

JENSEN PRECAST®