4'–0" x 6'–6" PARKWAY WATER VAULT x 4'–0" DEEP

NOTES:

HANDHOLE DESIGNED IN ACCORDANCE WITH AASHTO H–20–44 TRAFFIC BRIDGE LOADING USING 5,500 PSI [37.92MPa] COMPRESSIVE STRENGTH CONCRETE AND 60,000 PSI [413.2MPa] YIELD STRENGTH ASTM A–706 STEEL REINFORCEMENT PER CALCS. #31951.

COVER DESIGNED FOR PARKWAY LOADING @ 300 P.S.F. PER CALC. #31429.

HANDHOLE TO BE PLACED ON A MIN. 6" BASE OF CRUSHER RUN FOR EASE OF INSTALLATION AND EVEN LOAD DISTRIBUTION.

ORDERING INFORMATION:

K466–FH48–08P FOR ASSEMBLY AS SHOWN.
TOTAL WEIGHT OF ASSEMBLY SHOWN IS 7,375 lbs.

1. PB466–L36–08, 36" LOWER SECTION. WT. 5,200 lbs.
2. PB466–T12–08P, 12" TOP SECTION. W/ F466–PB–BD ANGLE FRAME CAST–IN. WT. 1,750 lbs.
3. CA466–PRWV, 3 PIECE PARKWAY COVER (SC466–RD) W/ (2) LOOSE I–BEAM (SCB466–247), (12) 1/2"–13NC x 2 1/2" S.S.H.H. BOLT FOR BOLT DOWN, (6) FLUSH LIFT HANDLE, PAINTED RED. WT. 425 lbs.
4. 12" x 12" PIPE SLOT K.O. x 5" DEEP. LOCATE AS FOLLOWS: LOWER SECTION (2) SHELL MTD.

GENERAL NOTES:

1. Minimum soil bearing capacity is hereby assumed to be 2000 PSF unless otherwise documented by a geotechnical report that shall be provided to Jensen Precast by the end user. Jensen Precast shall not be held responsible for the soil bearing capacity.
2. Installation of Manholes, Vaults, Handholes, Meter Boxes etc. will be as per Jensen installation procedures.
3. Structural modification to the Jensen line of products is not permitted without prior written approval from Jensen Engineering Department.
4. Do not scale the drawings, verify all dimensions including rough openings, if any discrepancies are found, notify the Jensen Engineer immediately.
5. The Jensen Engineer will interpret the intent of the drawings in case of possible conflict or discrepancy.
6. Permissible Variations:
   Dimensional Tolerances – The length, width, height, or dia. measurements of the structure when measured on the inside surfaces shall not deviate form design dimensions by more than the following:

Dimensions:	Tolerance:
0 to 5 Feet	1/4"
5 to 10 Feet	3/8"

   10 to 20 Feet as agreed upon between the supplier and purchaser.
7. Squareness Tolerance:
   he inside of the precast concrete component shall be square as determined by diagonal measurements. The difference between such measurements shall not exceed the following:

Measured Length:	Allowable Difference
0 to 10 Feet	1/2"
10 to 20 Feet	3/4"

   20 Feet and over as agreed upon between the supplier and purchaser.

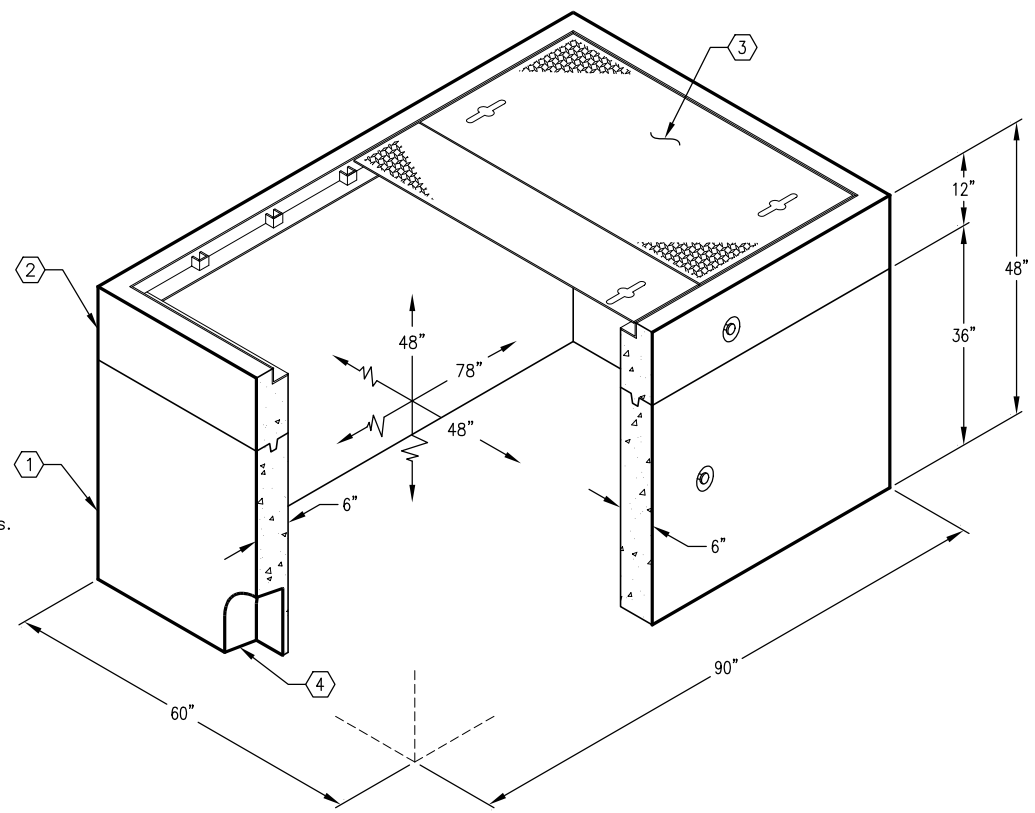

MINIMUM EXCAVATION SIZE:
6'–0" x 8'–6" x DEPTH REQ'D.

JENSEN PRECAST

AUTOCAD REL. 14

K466–FH48–08P
PER CUSTOMER SPECS. 03–01–02

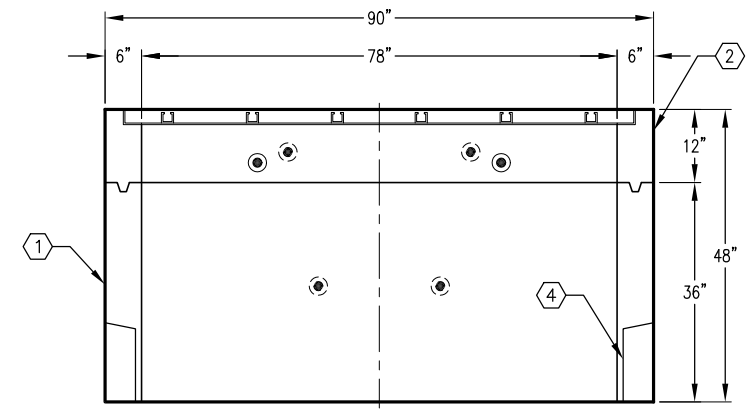

SECTION A–A

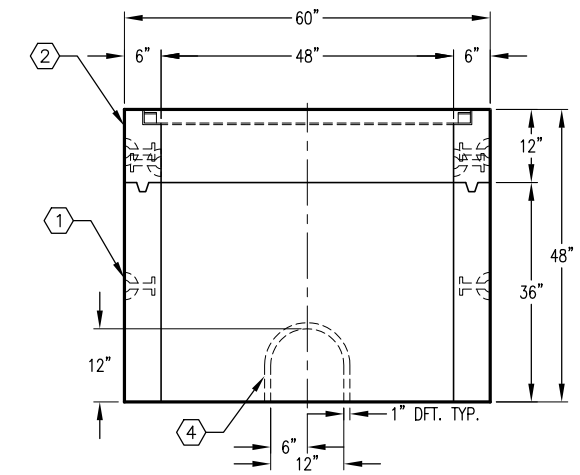

SECTION B–B

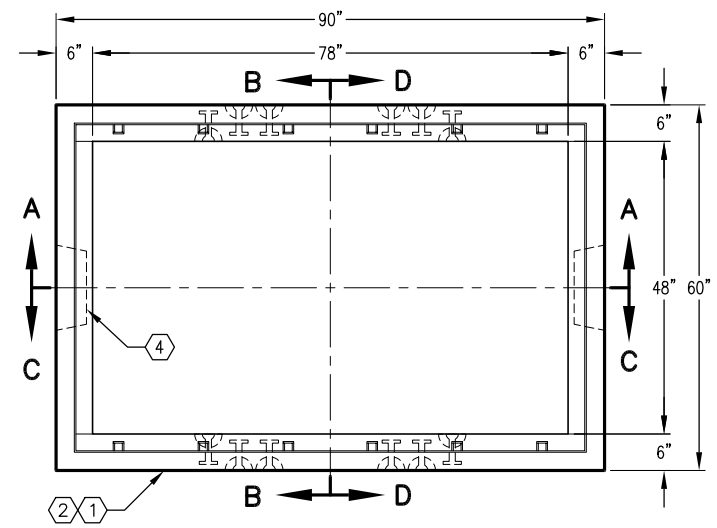

PLAN VIEW

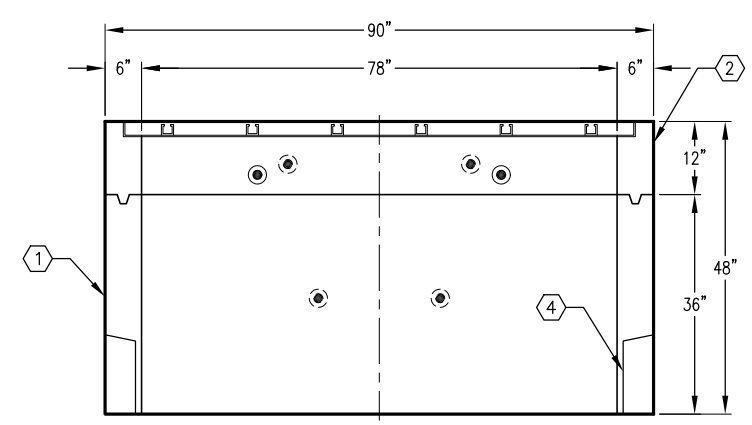

SECTION C–C

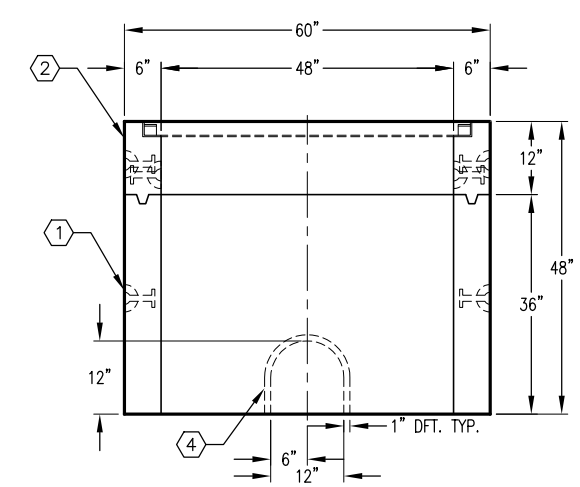

SECTION D–D

JENSEN PRECAST

#	DATE	DESCRIPTION	BY

K466–FH48–08P
PER CUSTOMER SPECS. 03–01–02