PTS65-TST

MANHOLE
SUREWEST TELEPHONE
(TRAFFIC RATED)
4'-6" x 8'-6" x 6'-6"
(INSIDE DIMENSIONS)

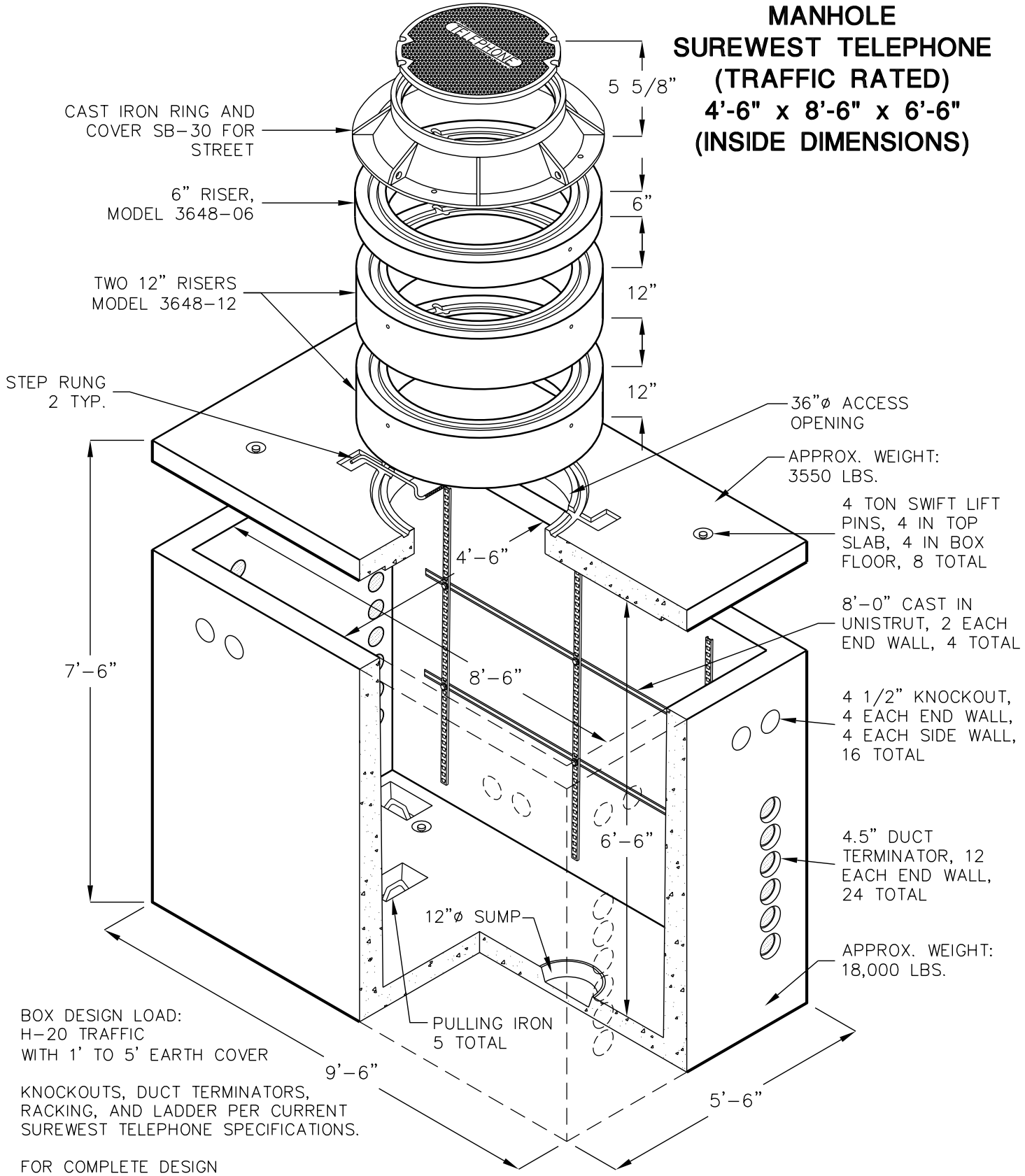

BOX DESIGN LOAD:
H-20 TRAFFIC
WITH 1' TO 5' EARTH COVER

KNOCKOUTS, DUCT TERMINATORS, RACKING, AND LADDER PER CURRENT SUREWEST TELEPHONE SPECIFICATIONS.

FOR COMPLETE DESIGN AND PRODUCT INFORMATION, CONTACT JENSEN PRECAST.

12/13/04
PTS65-TST.dwg
© 2004 Jensen Precast

JENSEN PRECAST®