577-TST

SUREWEST TELEPHONE
4'-1" x 6'-7" x 6'-2" I.D.
TRAFFIC RATED

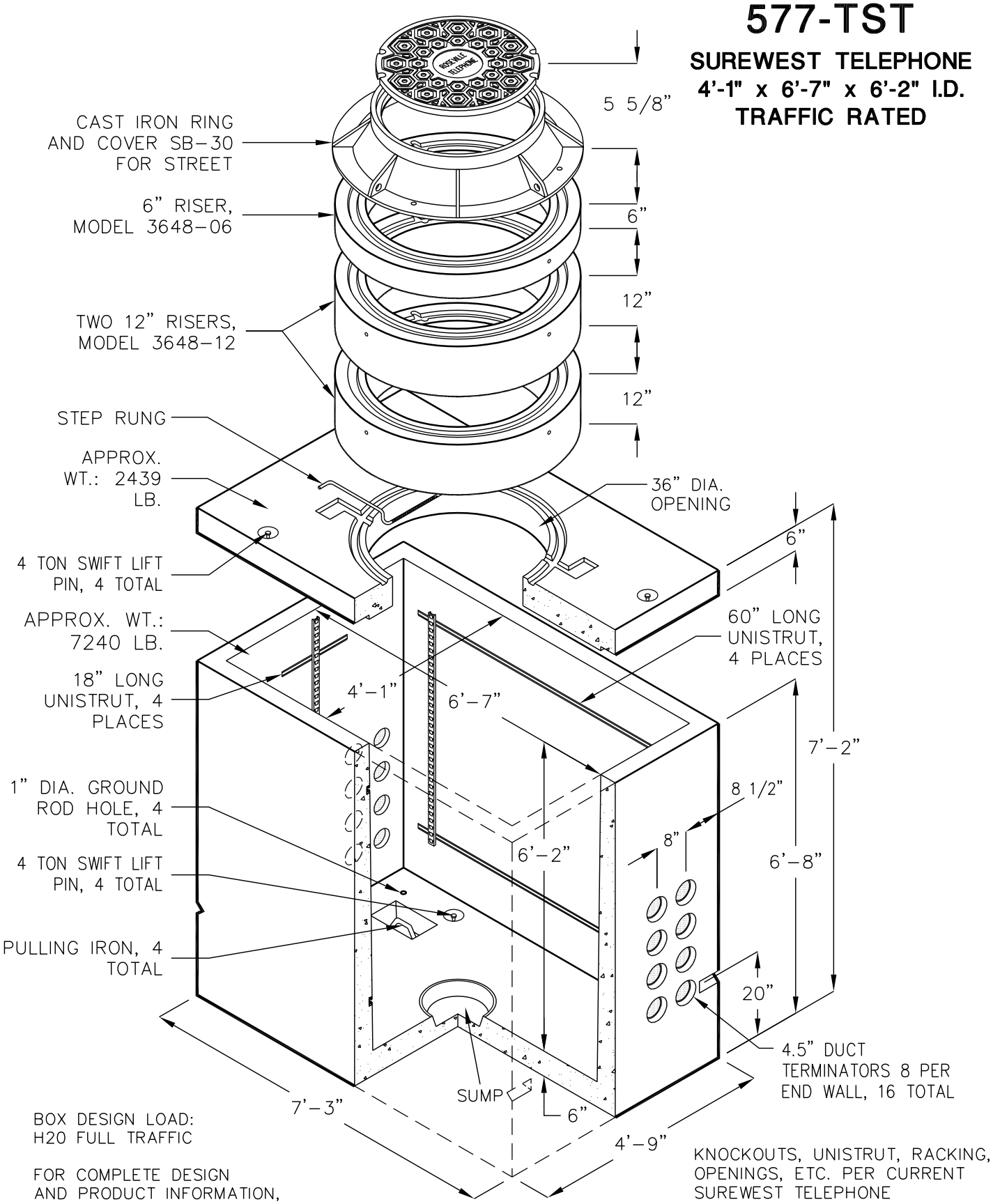

BOX DESIGN LOAD:
H20 FULL TRAFFIC

FOR COMPLETE DESIGN AND PRODUCT INFORMATION, CONTACT JENSEN PRECAST.

KNOCKOUTS, UNISTRUT, RACKING, OPENINGS, ETC. PER CURRENT SUREWEST TELEPHONE SPECIFICATIONS.

12/13/04
577-TST.dwg
© 2004 Jensen Precast

JENSEN PRECAST®