60" I.D. x 6" WALL
24" CONCENTRIC CONE

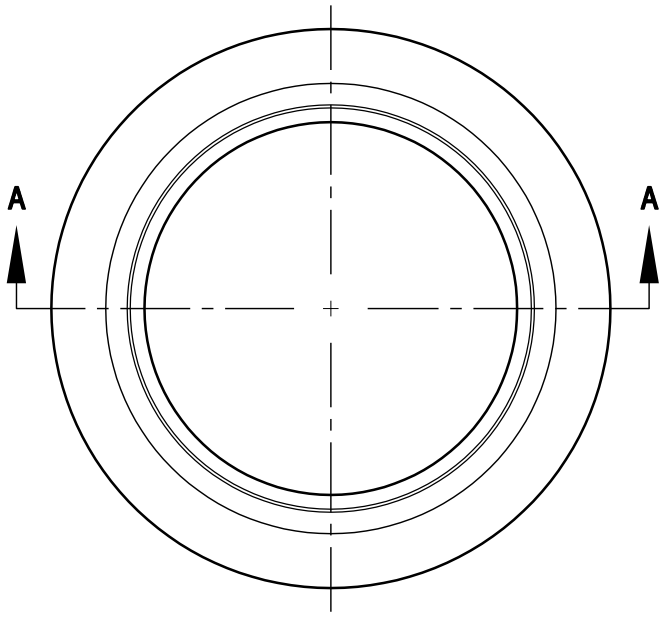

PLAN VIEW

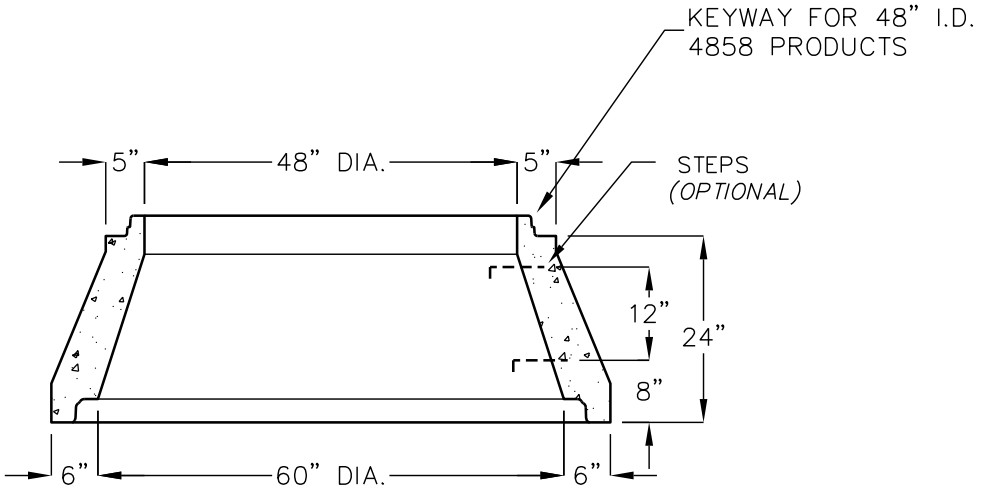

SECTION A–A

	APPROX. WT.
6072CC48-24 CON CONE	2360 LBS.
6072CC48-24S CON CONE W/STEP HOLES	2360 LBS.

CONFORMS TO ASTM SPECS C–478 AND AASHTO NO. M199–93.

FOR COMPLETE DESIGN AND PRODUCT INFORMATION CONTACT JENSEN PRECAST.

7/6/06
60_6W_24H_CONC CONE_A.dwg

© 2006 Jensen Precast

JENSEN PRECAST®