2'-6" x 4'-0" EDISON DUCTED INTERCEPT BOX x 42" DEEP

NOTES:

[illegible] DESIGNED WITH AASHTO H-20-44 TRAFFIC BRIDGE LOADING USING 5,500 PSI COMPRESSIVE STRENGTH CONCRETE AND 60,000 PSI YIELD STRENGTH ASTM A-706 STEEL REINFORCEMENT.

[illegible] A MIN. 6" BASE OF CRUSHER RUN FOR EASE OF INSTALLATION AND EVEN LOAD DISTRIBUTION.

ORDERING INFORMATION:

APPROVED FOR EDISON SPEC. UGS-220.1 PB-4
TOTAL WEIGHT OF ASSEMBLY SHOWN IS 3,627 lbs.

1. PB3048 -B-05, BASE SLAB, Wt. 1,700 lbs.
2. PB3048D-127-05, INTERMEDIATE SECTION, Wt. 1,118 lbs.
3. PB3048-RE, EXTENSION SECTION, Wt. 331 lbs.
4. PB3048-16T, 6" TOP SECTION, W/ GALV. F3048-PB-ANG ANGLE FRAME CAST-IN, Wt. 208 lbs.
5A. SC3048-10V, ONE PIECE TRAFFIC COVER, GALVANIZED FINISH, MARKED "EDISON", Wt. 220 lbs. (AS SHOWN).
B. 12-20-23, ONE PIECE RPM COVER, MARKED "EDISON". (NOT SHOWN).
6. 6" x 7" DIA. SUMP x 2" DEEP. BASE SLAB.
7. 14" x 14" DUCTED K.O. x 14" DEEP. INTERMEDIATE SECTION.
8. 8" x 16" K.O. x 5" DEEP. INTERMEDIATE SECTION.
9. 7/8" x 9" GALV. PULL IRON. BASE SLAB.
10. ⊕ 1" DIA. BLAND GROUND ROD HOLE. BOTTOM SECTION.
11. + 1/2" PLASTIC INSERTS. INTERMEDIATE SECTION.
12. O 1/2" P-35-1 O.B. INSERT W/CLEAN-OUT HOLE. TOP SECTION.

PARKWAY ASSEMBLY WITH RPM COVER K30486-D142-11P,
LIGHT TRAFFIC ASSEMBLY WITH STEEL COVER K3048-D142-11T,

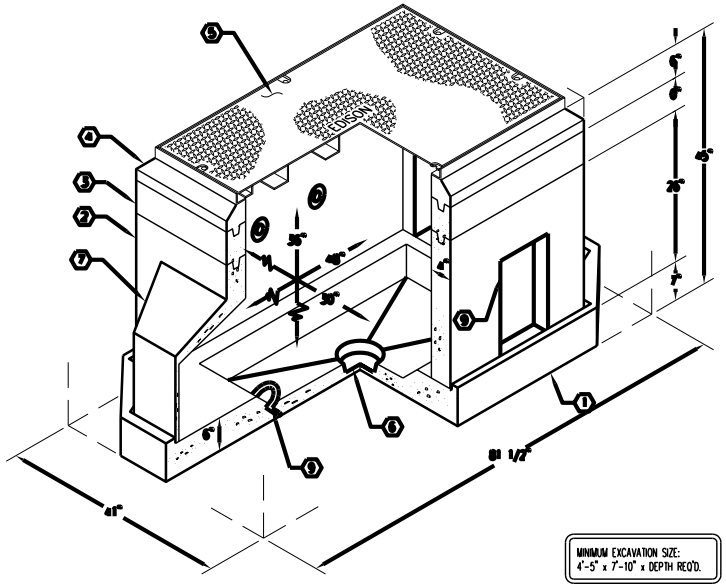

MINIMUM EXCAVATION SIZE:
4'-5" x 7'-10" x DEPTH REQ'D.

JENSEN PRECAST
AUTOCAD REL. 14

#	DATE	DESCRIPTION	BY

K3048-D142-11
PER EDISON SPEC. UGS-220.1 PB-4 03-01-02

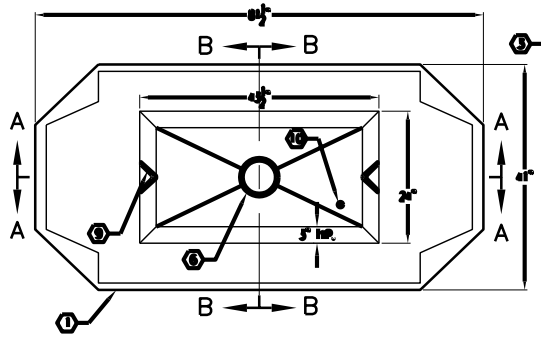

PLAN VIEW OF BOTTOM SLAB

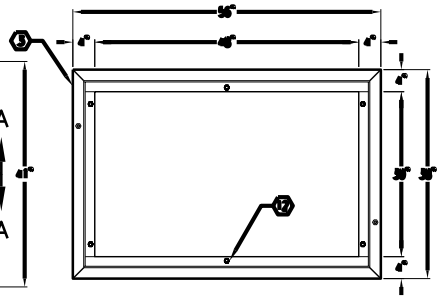

PLAN VIEW OF TOP SECTION

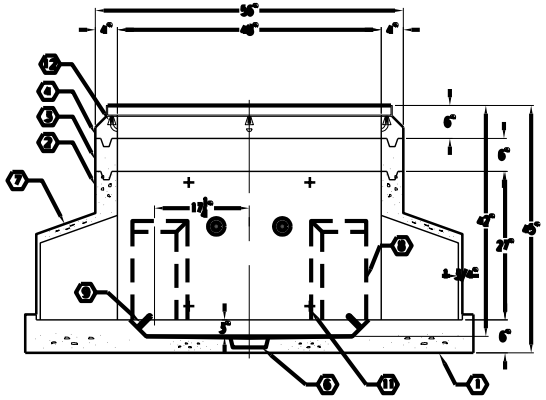

SECTION A-A

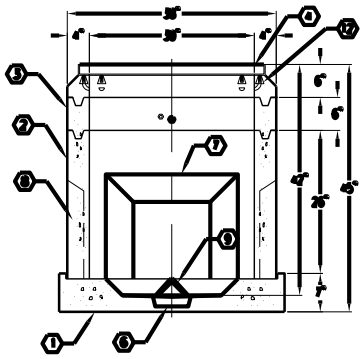

SECTION B-B

JENSEN PRECAST
AUTOCAD REL. 14

#	DATE	DESCRIPTION	BY

K3048-D142-11
PER EDISON SPEC. UGS-220.1 PB-4 03-01-02