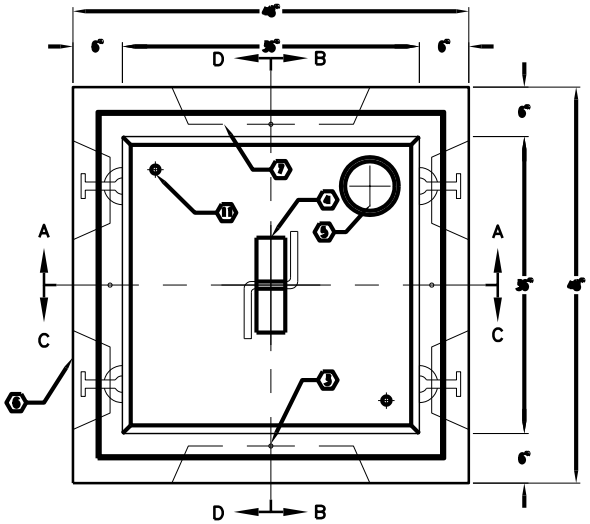

PLAN VIEW

NOTES:

- PULL BOX DESIGNED IN ACCORDANCE WITH AASHTO H-20-44 TRAFFIC BRIDGE LOADING USING 5,500 PSI (37.92MPa) COMPRESSIVE STRENGTH CONCRETE AND 60,000 PSI (413.2MPa) YIELD STRENGTH ASTM A-706 STEEL REINFORCEMENT PER CALC. #30649.
- COVER DESIGNED FOR TRAFFIC LOADING PER CALCS.
- PULL BOX TO BE PLACED ON A MIN. 6" BASE OF CRUSHER RUN FOR EASE OF INSTALLATION AND EVEN LOAD DISTRIBUTION.

ORDERING INFORMATION:

K3636-FP36-23T (LAUSD) FOR ASSEMBLY AS SHOWN.
TOTAL WEIGHT OF ASSEMBLY IS 4,715 lbs.

1. PB3636-B36-23T, 36" BOTTOM SECTION. WT. 4,525 lbs.
   W/F3636-PB GALVANIZED ANGLE FRAME CAST-IN.
2. SC3636-1SRDV (NOT SHOWN) ONE PIECE TRAFFIC BOLT DOWN SLIP RESISTANT PLATE. GALVANIZE AFTER FABRICATION. WT. 190 lbs.
3. 1/2" P36-1 INSERT W/CLEAN OUT HOLE. LOCATE AS FOLLOWS: (4) FRAME MTD.
4. 7/8" DIA. FLUSH MTD. PULL IRON. LOCATE AS FOLLOWS: (1) CORE MTD.
5. 6" x 7" x 5" DEEP SUMP. WITH COVER PLATE LOCATE AS FOLLOWS: (1) CORE MTD.
6. 8" x 16" KNOCKOUT x 4 1/2" DEEP. DRAFT AS FOLLOWS: ALL SIDES 2° DRAFT. (4) SHELL MTD.
7. 20" x 20" KNOCKOUT x 4 1/2" DEEP. DRAFT AS FOLLOWS: ALL SIDES 2° DRAFT. (2) SHELL MTD.
8. 1/2" DIA. PLASTIC RACKING INSERT. LOCATE AS FOLLOWS: (8) CORE MTD.
11. 1" DIA. BLIND GROUND ROD HOLE. LOCATE AS FOLLOWS: (2) CORE MTD.

RACKING KIT INCLUDES

08-40-38 GRATE, A2020 8" DIA.
18-10-14 CABLE RACK, 14 HOLE (4) REQ'D.
18-20-07 CABLE HOOK, 7 1/2" HOOKS (8) REQ'D.
18-20-30 CABLE HOOK, INSULATOR (8) REQ'D.
20-10-425 BOLT, 1/2" x 2 1/2" HEX HEAD S.S. BOLTS (8) REQ'D.

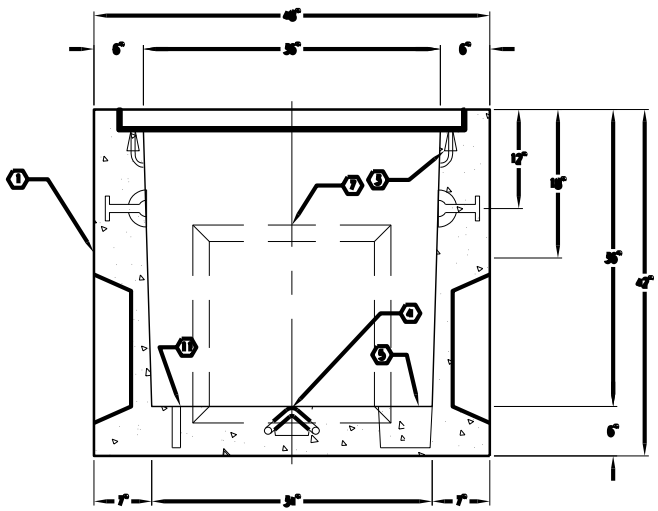

SECTION A-A/C-C

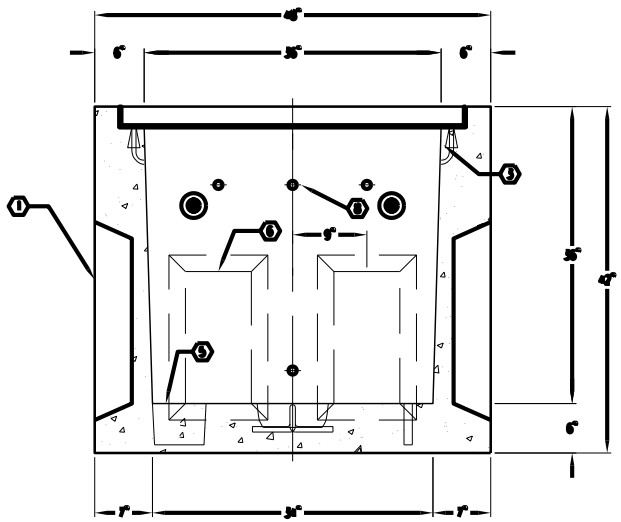

SECTION B-B/D-D

#	DATE	DESCRIPTION	BY

JENSEN PRECAST®

14221 SAN BERNARDINO AVE., FONTANA, CA 92335

THE DESIGN AND DETAIL OF THIS DRAWING ARE THE PROPERTY OF JENSEN PRECAST AND NOT TO BE USED EXCEPT IN CONNECTION WITH ITS OWN WORK. DESIGN AND INVENTION RIGHTS ARE RESERVED.

DRAWN BY:	DATE:	SCALE:
SMG	4-13-01	1 1/2"=1'-0"

3'-0" x 3'-0" PULL BOX - LAUSD x 36" DEEP W/ANGLE FRAME

DWG. NO.: K3636-FP36-23TF

AutoCAD 14