2'-0" x 3'-0" AZUSA TRAFFIC DUCTED PULL BOX x 3'-0" DEEP

NOTES:

- PULL BOX DESIGNED IN ACCORDANCE WITH AASHTO H-20-44 TRAFFIC BRIDGE LOADING USING 5,500 PSI [37.92MPa] COMPRESSIVE STRENGTH CONCRETE AND 60,000 PSI [413.2MPa] YIELD STRENGTH ASTM A-706 STEEL REINFORCEMENT PER CALC. #31633.
- COVER DESIGNED FOR H-20-44 TRAFFIC LOADING FOR USE IN OFF-STREET LOCATIONS PER CALC. #31354
- PULL BOX TO BE PLACED ON A MIN 6" BASE OF CRUSHER RUN FOR EASE OF INSTALLATION AND END LOAD DISTRIBUTION.

ORDERING INFORMATION:

K2436-DP36-31T FOR ASSEMBLY AS SHOWN.
TOTAL WEIGHT OF ASSEMBLY SHOWN IS 2,150 LBS.

1. PB2436D-B30-05, 30" BOTTOM SECTION, WT. 1,822 lbs.
2. PB2436-16T, 6" TOP SECTION, W/FF2436-PB-ANG. FRAME CAST IN, WT. 185 lbs.
3. SC2436-10V, ONE PIECE TRAFFIC COVER W/(4) 1/2" x 13 x 2 1/2" S.S. PENTA HEAD BOLT-DOGPNS, (2) PICK HOLES, WITH GALVANIZED FINISH, MARKING "AZUSA HIGH VOLTAGE", WT. 134 lbs.
5. 6" x 7" DIA. SUMP x 4" DEEP, BOTTOM SECTION (1) CORE MTD.
6. 11" x 11" DUCTED K.O. x 13 1/2" DEEP, DRAFT AS FOLLOWS: T=6", S1=S2=5", B=0", BOTTOM SECTION (2) CORE MTD.
7. 8" x 16" K.O. x 3" DEEP, DRAFT 2" ALL SIDE TYP. BOTTOM SECTION (4) SHELL MTD.
8. 1" DIA. BLAND GROUND ROD HOLE, BOTTOM SECTION (2) CORE MTD.
10. 1/2" PLASTIC INSERT, BOTTOM SECTION (8) CORE MTD.
11. 1/2" P-35-T INSERT W/CLEAN-OUT HOLE, TOP SECTION (4) FRAME MTD.
12. 1/2" P-36-T INSERT, TOP SECTION (2) SHELL MTD.
14. 7/8" DIA. x 9" VERTICAL GALV. PULL IRON, BOTTOM SECTION (2) CORE MTD.

GENERAL NOTES:

1. Minimum soil bearing capacity is hereby assumed to be 2000 PSF unless otherwise documented by a geotechnical report that shall be provided to Jensen Precast by the end user. Jensen Precast shall not be held responsible for the soil bearing capacity.
2. Installation of Manholes, Vaults, Handholes, Meter Boxes etc. will be as per Jensen Installation procedures.
3. Structural modification to the Jensen line of products is not permitted without prior written approval from Jensen Engineering Department.
4. Do not scale the drawings, verify all dimensions including rough openings, if any discrepancies are found, notify the Jensen Engineer immediately.
5. The Jensen Engineer will interpret the intent of the drawings in case of possible conflict or discrepancy.
6. Permissible Variations:
   Dimensional Tolerances - The length, width, height, or dia. measurements of the structure when measured on the inside surfaces shall not deviate form design dimensions by more than the following:

Dimensions:	Tolerance:
0 to 5 Feet	1/4"
5 to 10 Feet	3/8"
10 to 20 Feet as agreed upon between the supplier and purchaser.	

7. Squareness Tolerance:
   The inside of the precast concrete component shall be square as determined by diagonal measurements. The difference between such measurements shall not exceed the following:

Measured Length:	Allowable Difference
0 to 10 Feet	1/2"
10 to 20 Feet	3/4"
20 Feet and over as agreed upon between the supplier and purchaser.	

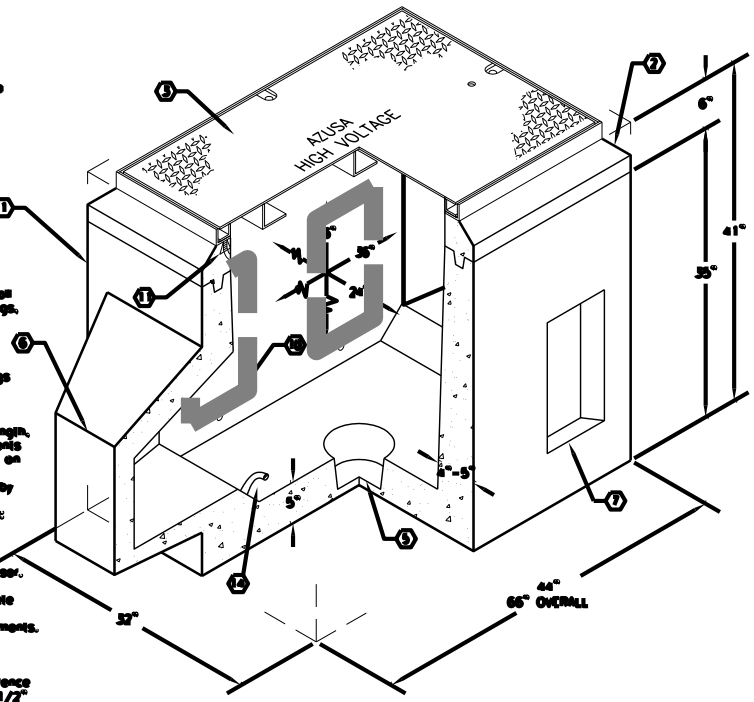

MINIMUM EXCAVATION SIZE:
3'-8" x 6'-6" x DEPTH REQ'D.

JENSEN PRECAST

AUTOCAD REL. 14

K2436-DP36-31T

CITY OF AZUSA DWG ED13 03-01-02

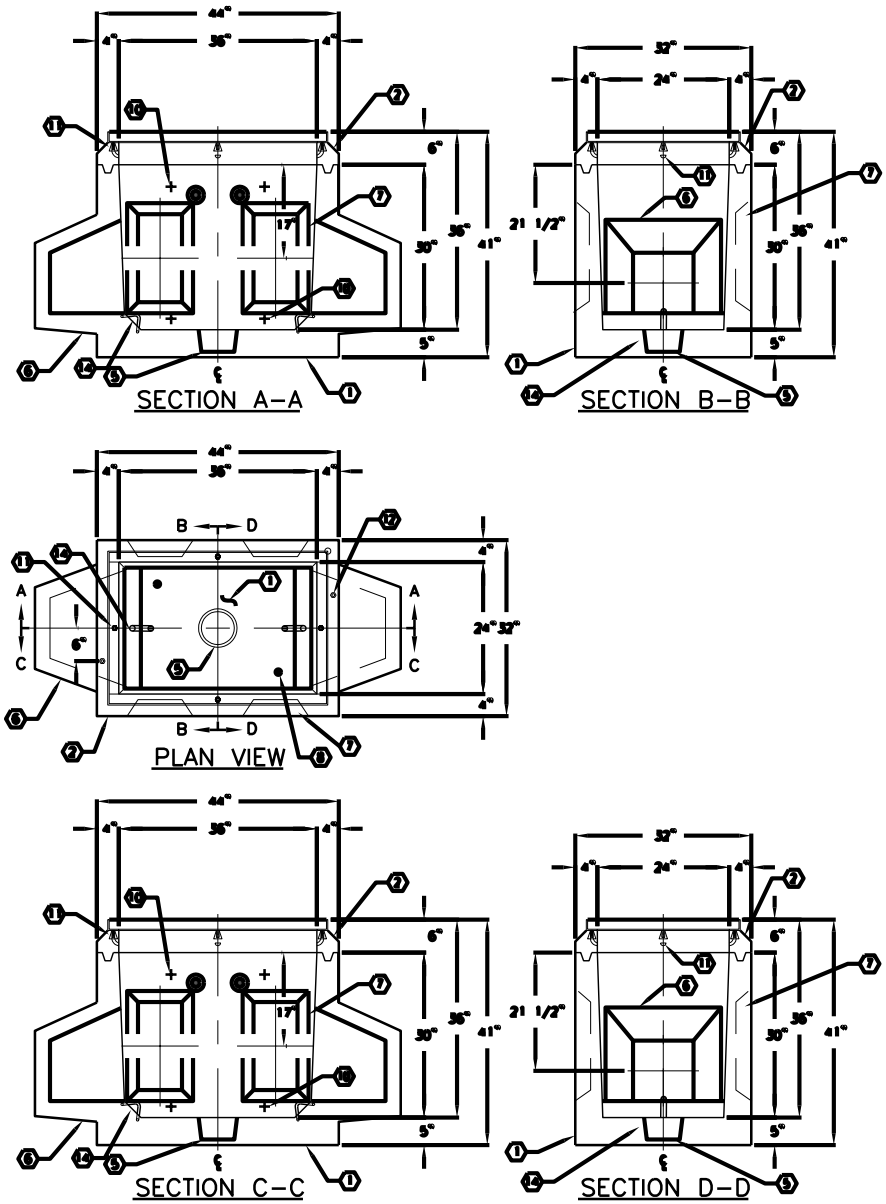

JENSEN PRECAST

#	DATE	DESCRIPTION	BY

K2436-DP36-31T

CITY OF AZUSA DWG ED13 03-01-02