6'-0" x 8'-6" AZUSA TRANSFORMER PAD W/4'-0" x 7'-0" ENCLOSURE x 42" DEEP

NOTES:

- TRANSFORMER PAD AND ENCLOSURE ARE DESIGNED FOR PARKWAY LOADING USING 5,500 P.S.I. [37.92 MPa] COMPRESSIVE STRENGTH CONCRETE AND 60,000 P.S.I. [413.2 MPa] YIELD STRENGTH ASTM A-706 STEEL REINFORCEMENT PER CALC. #31855.
- COVER IS DESIGNED FOR PARKWAY LOADING PER WESTERN UNDERGROUND COMMITTEE (W.U.C. 3.6).
- ENCLOSURE TO BE PLACED ON A MIN. 6" BASE OF CRUSHER RUN FOR EVEN LOAD DISTRIBUTION AND EASE OF INSTALLATION.
- PAD AND ENCLOSURE DESIGNED FOR 7,500 LB. (TRANSFORMER) VERTICAL DEAD LOAD.

ORDERING INFORMATION:

K686-SB47-31 FOR ASSEMBLY AS SHOWN.
TOTAL WEIGHT OF ASSEMBLY AS SHOWN IS 9,150 lbs.

1. SB47-B42-11, 42" BOTTOM SECTION, WT. 6,400 lbs.
2. PD72102-16-11, 6" TRANSFORMER PAD, WT. 2,715 lbs.
3. POLYMER CONCRETE COVER (12-20-20) W/(6) 1/2" x 2 1/2" S.S. PENTA HEAD BOLT, WT. 250 Lbs. MARK: "AZUSA-HIGH VOLTAGE"
4. 16" x 20" CORNER KNOCKOUT x 3 1/2" DEEP, DRAFT AS FOLLOWS: 1=2", S1=S2=3 1/2", B=0°. LOCATE AS FOLLOWS: BOTTOM SECTION (8) SHELL MTD.
5. 1 5/8" x 1 5/8" UNISTRUT x 10" LONG, TRANSFORMER PAD (2) TABLE MTD.
6. 1/2" P-35-1 INSERT W/CLEAN-OUT HOLE. LOCATE AS FOLLOWS: TRANSFORMER PAD (6) FRAME MTD.
7. 1" GALV. COIL INFO INSERT. LOCATE AS FOLLOWS: BOTTOM SECTION (4) CORE. MTD.

GENERAL NOTES:

1. Minimum soil bearing capacity is hereby assumed to be 2000 PSF unless otherwise documented by a geotechnical report that shall be provided to Jensen Precast by the end user. Jensen Precast shall not be held responsible for the soil bearing capacity.
2. Installation of Manholes, Vaults, Handholes, Meter Boxes etc. shall be as per Jensen Installation procedures.
3. Structural modification to the Jensen line of products is not permitted without prior written approval from Jensen Engineering Department.
4. Do not scale the drawings, verify all dimensions including rough openings. If any discrepancies are found, notify the Jensen Engineer immediately.
5. The Jensen Engineer will interpret the intent of the drawings in case of possible conflict or discrepancy.
6. Permissible Variations:
   Dimensional Tolerances - The length, width, height, or dia. measurements of the structure when measured on the inside surfaces shall not deviate from design dimensions by more than the following:

Dimensions:	Tolerance:
0 to 5 Feet	1/4"
5 to 10 Feet	3/8"
10 to 20 Feet	as agreed upon between the supplier and purchaser.

7. Squareness Tolerance:
   The inside of the precast concrete component shall be square as determined by diagonal measurements. The difference between such measurements shall not exceed the following:

Measured Length:	Absolute Difference
0 to 10 Feet	1/2"
10 to 20 Feet	3/4"
20 Feet and over	as agreed upon between the supplier and purchaser.

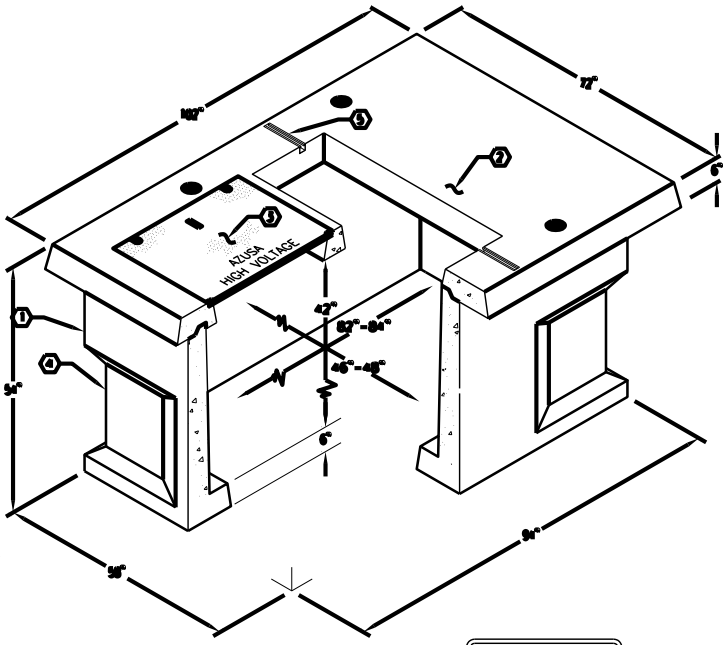

MINIMUM EXCAVATION SIZE:
5'-6" x 8'-6" x DEPTH REQ'D.

JENSEN PRECAST

AUTOCAD REL. 14

K686-SB42-31
CITY OF AZUSA DWG ED7 03-01-02

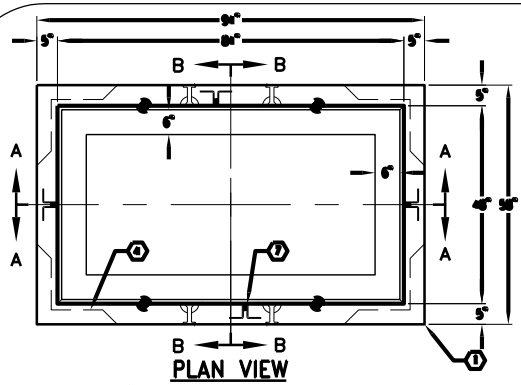

PLAN VIEW
W/O TRANSFORMER PAD

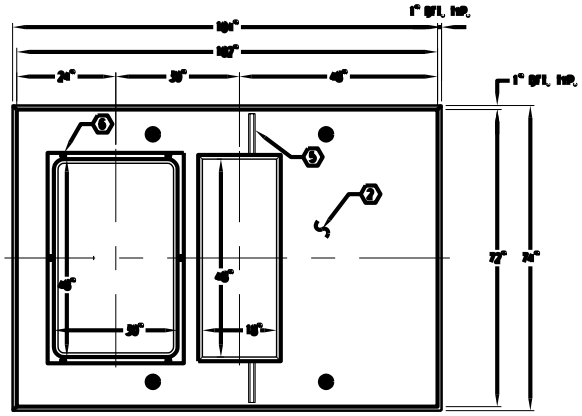

PLAN VIEW OF TRANSFORMER PAD

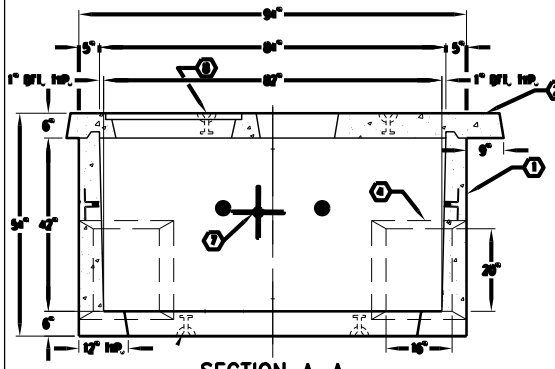

SECTION A-A

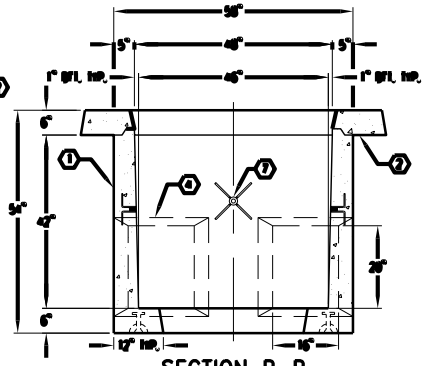

SECTION B-B

JENSEN PRECAST

#	DATE	DESCRIPTION	BY

K686-SB42-31
CITY OF AZUSA DWG ED7 03-01-02