3'-0" x 5'-0" AZUSA TRAFFIC HINGED-DUCTED PULL BOX x 48" DEEP

NOTES:

- PULL BOX DESIGNED IN ACCORDANCE WITH AASHTO H-20-44 TRAFFIC BRIDGE LOADING USING 5,500 PSI (37.92MPa) COMPRESSIVE STRENGTH CONCRETE AND 60,000 PSI (413.2MPa) YIELD STRENGTH ASTM A-706 STEEL REINFORCEMENT PER CALC. #31395.
- COVER DESIGNED FOR H-20-44 TRAFFIC LOADING FOR USE IN OFF-STREET LOCATIONS PER CALC. #31683.
- PULL BOX TO BE PLACED ON A MIN. 6" BASE OF CRUSHER RUN FOR EASE OF INSTALLATION AND EVEN LOAD DISTRIBUTION.

1. PB3660D-B42-05, 42" BOTTOM SECTION, WT. 4,870 lbs.
2. PB3660-T04, 6" TOP SECTION, W/ FRAME (F3660-PB-HNG) CAST-IN.
3. CA3660-105A, TWO PIECE STEEL TRAFFIC HINGED COVER (SC3660-THOV), W/(2) 1/2" S.S. PENTA HEAD BOLTS. GALVANIZED FINISH MARKED "AZUSA HIGH VOLTAGE", WT 316 lbs.
4. 6" DIA. SUMP • 3 1/2" DEEP. LOCATE AS FOLLOWS: BOTTOM SECTION (1) CORE MTD.
5. 20" • 26 1/2" DUCTED K.O. • 12" DEEP. LOCATE AS FOLLOWS BOTTOM SECTION (2) CORE MTD.
6. 8" • 16" K.O. • 3" DEEP. LOCATE AS FOLLOWS: BOTTOM SECTION (4) SHELL MTD.
7. 1" DIA. BLIND GROUND ROD HOLE. LOCATE AS FOLLOWS: BOTTOM SECTION (2) CORE MTD.
8. 7/8" • 4 1/2" GALV. PULL IRON LOCATE AS FOLLOWS: BOTTOM SECTION (2) CORE MTD.
9. 1/2" P-36-1 INSERT. LOCATE AS FOLLOWS: TOP SECTION (4) CORE MTD.
10. 1/2" PLASTIC INSERT. LOCATE AS FOLLOWS: BOTTOM SECTION (20) CORE MTD.

ORDERING INFORMATION:

K3660-DP48-31TSA FOR ASSEMBLY AS SHOWN.
TOTAL WEIGHT OF ASSEMBLY SHOWN IS 5,816 lbs.

GENERAL NOTES:

1. Minimum soil bearing capacity is hereby assumed to be 2000 PSF unless otherwise documented by a geotechnical report that shall be provided to Jensen Precast by the end user. Jensen Precast shall not be held responsible for the soil bearing capacity.
2. Installation of Manholes, Vaults, Handholes, Meter Boxes etc. shall be as per Jensen installation procedures.
3. Structural modification to the Jensen line of products is not permitted without prior written approval from Jensen Engineering Department.
4. Do not scale the drawings, verify all dimensions including rough openings, if any discrepancies are found, notify the Jensen Engineer immediately.
5. The Jensen Engineer will interpret the intent of the drawings in case of possible conflict or discrepancy.
6. Permissible Variations:
   Dimensional Tolerances - The length, width, height, or dia. measurements of the structure when measured on the inside surfaces shall not deviate form design dimensions by more than the following:

Dimensions:	Tolerance:
0 to 5 Feet	1/4"
5 to 10 Feet	3/8"
10 to 20 Feet as agreed upon between the supplier and purchaser.	

7. Squareness Tolerance:
   The inside of the precast concrete component shall be square as determined by diagonal measurements. The difference between such measurements shall not exceed the following:

Measured Length:	Allowable Difference
0 to 10 Feet	1/2"
10 to 20 Feet	3/4"
20 Feet and over as agreed upon between the supplier and purchaser.	

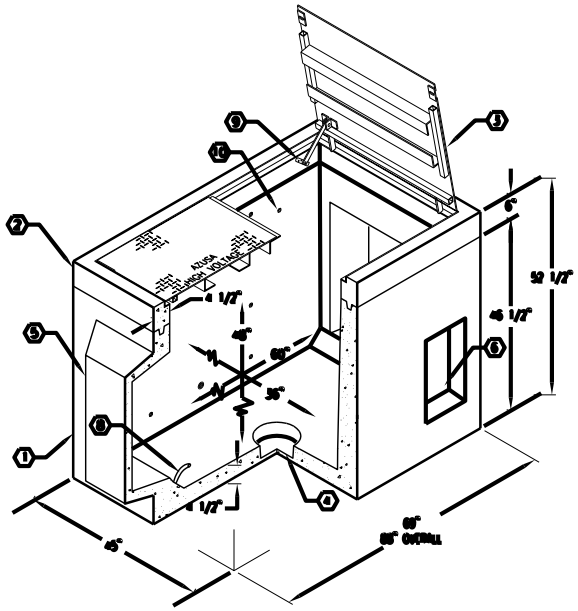

MINIMUM EXCAVATION SIZE:
4'-9" x 8'-4" x DEPTH REQ'D.

JENSEN PRECAST

AUTOCAD REL. 14

K3660-DP48-31TSA

CITY OF AZUSA DWG ED14 03-01-02

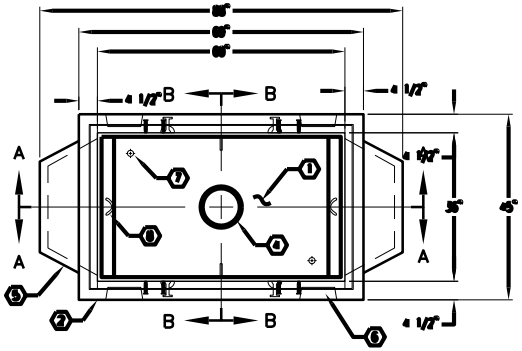

PLAN VIEW

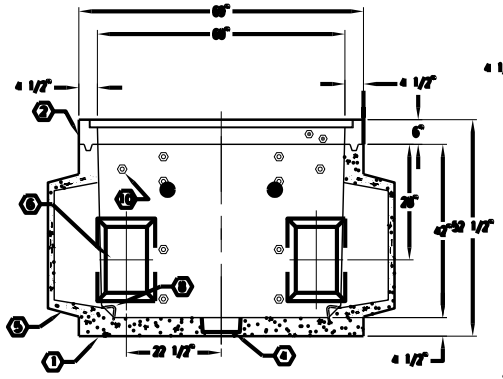

SECTION A-A

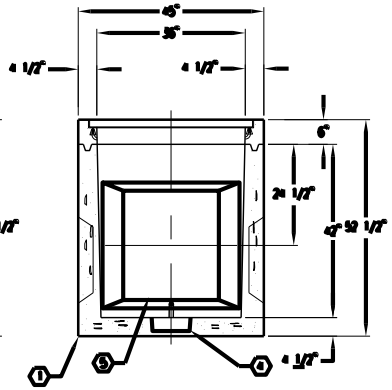

SECTION B-B

JENSEN PRECAST

#	DATE	DESCRIPTION	BY

K3660-DP48-31TSA

CITY OF AZUSA DWG ED14 03-01-02