60" I.D. x 6" WALL
36" ECCENTRIC CONE

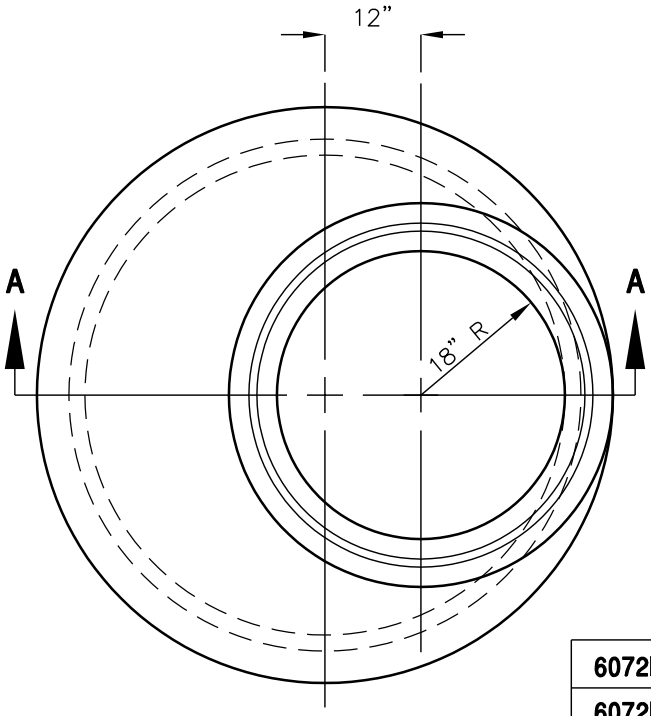

PLAN VIEW
4860 CONE

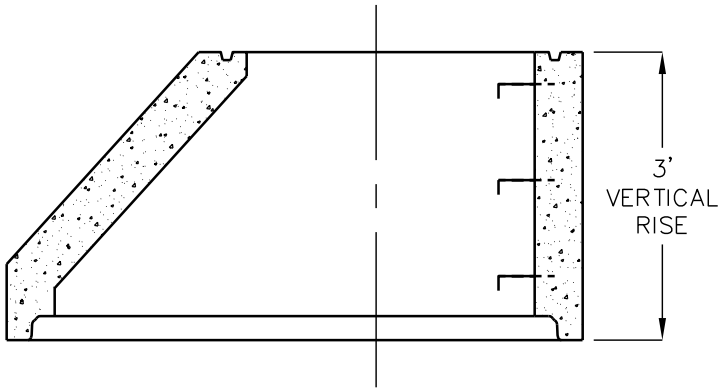

SECTION A-A

	APPROX. WT.
6072EC36-36 ECC CONE	3700 LBS.
6072EC36-36S ECC CONE W/STEP HOLES	3700 LBS.

CONFORMS TO ASTM SPECS C-478 and AASHTO No. M199-93.

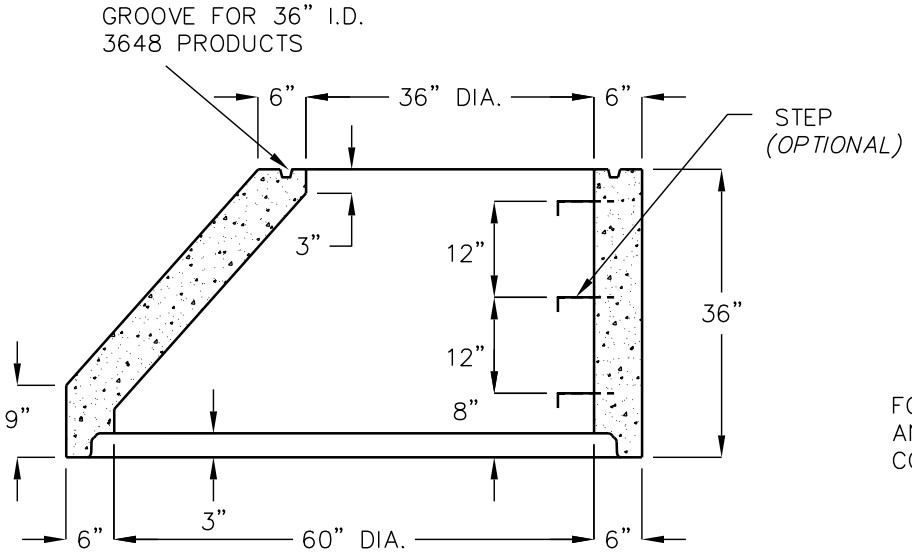

SIDE VIEW

FOR COMPLETE DESIGN,
AND PRODUCT INFORMATION,
CONTACT JENSEN PRECAST.

2/16/05
60_6W_36H_ECCONE.dwg
© 2003 Jensen Precast

JENSEN PRECAST®