6'–0" x 10'–0" RIVERSIDE DUCTED MANHOLE x 7'–0" DEEP

NOTES:

- MANHOLE DESIGNED IN ACCORDANCE WITH AASHTO H–20–44 TRAFFIC BRIDGE LOADING USING 5,500 PSI [37.92MPa] COMPRESSIVE STRENGTH CONCRETE AND 60,000 PSI [413.2MPa] YIELD STRENGTH ASTM A–706 STEEL REINFORCEMENT PER CALCS. #31570.
- MANHOLE TO BE PLACED ON A 6" BASE OF CRUSHER RUN FOR EASE OF INSTALLATION AND EVEN LOAD DISTRIBUTION.
- LIMITS OF COVER OVER ROOF SECTION IS 6" TO 4'–0".

ORDERING INFORMATION:

K610–DM84–21 FOR ASSEMBLY AS SHOWN.

TOTAL WEIGHT OF ASSEMBLY SHOWN IS 28,910 Lbs.

1. UV610–B24–05, 24" BOTTOM SECTION. WT. 12,156 Lbs.
2. UV610–T60–21M, 60" ROOF SECTION. WT. 16,754 Lbs.
3. 13" DIA. x 14" DIA. SUMP x 5" DEEP W/SUMP COVER LOCATE AS FOLLOWS: BOTTOM SECTION (1) TABLE MTD.
4. 24" x 36" DUCTED KNOCKOUT x 12" DEEP. LOCATE AS FOLLOWS: ROOF SECTION (2) CORE MTD.
5. 18" x 18" KNOCKOUT x 4 1/2" DEEP. LOCATE AS FOLLOWS: ROOF SECTION (2) CORE MTD.
6. 10" DIA. VENT KNOCKOUT x 5" DEEP. LOCATE AS FOLLOWS: ROOF SECTION (2) CORE MTD.
7. 7/8" DIA. x 4 1/2" GALVANIZED PULL IRON. LOCATE AS FOLLOWS: BOTTOM SECTION (2) CORE MTD.; ROOF SECTION (2) CORE MTD.;
8. 1/2" PLASTIC INSERT. LOCATE AS FOLLOWS: ROOF SECTION (4) CORE MTD.
9. ◎1/2" THREADED BRONZE INSERT BRAZED TO STRUCTURAL STEEL REBAR. "GRD" SHALL BE STENCILED IN RED LETTERS (1 1/2" MIN., 2" MAX.) ON THE CONCRETE ABOVE EACH INSERT, BOTTOM SECTION (2) CORE MTD.; TOP SECTION (4) CORE MTD.
13. 1" DIA. BLIND GROUND ROD HOLE. LOCATE AS FOLLOWS: BOTTOM SECTION (2) CORE MTD.

GENERAL NOTES:

1. Minimum soil bearing capacity is hereby assumed to be 2000 PSF unless otherwise documented by a geotechnical report that shall be provided to Jensen Precast by the end user. Jensen Precast shall not be held responsible for the soil bearing capacity.
2. Installation of Manholes, Vaults, Handholes, Meter Boxes etc. will be as per Jensen installation procedures.
3. Structural modification to the Jensen line of products is not permitted without prior written approval from Jensen Engineering Department.
4. Do not scale the drawings, verify all dimensions including rough openings, if any discrepancies are found, notify the Jensen Engineer immediately.
5. The Jensen Engineer will interpret the intent of the drawings in case of possible conflict or discrepancy.
6. Permissible Variations:
   Dimensional Tolerances – The length, width, height, or dia. measurements of the structure when measured on the inside surfaces shall not deviate form design dimensions by more than the following:

Dimensions:	Tolerance:
0 to 5 Feet	1/4"
5 to 10 Feet	3/8"

   10 to 20 Feet as agreed upon between the supplier and purchaser.
7. Squareness Tolerance:
   he inside of the precast concrete component shall be square as determined by diagonal measurements. The difference between such measurements shall not exceed the following:

Measured Length:	Allowable Difference
0 to 10 Feet	1/2"
10 to 20 Feet	3/4"

   20 Feet and over as agreed upon between the supplier and purchaser.

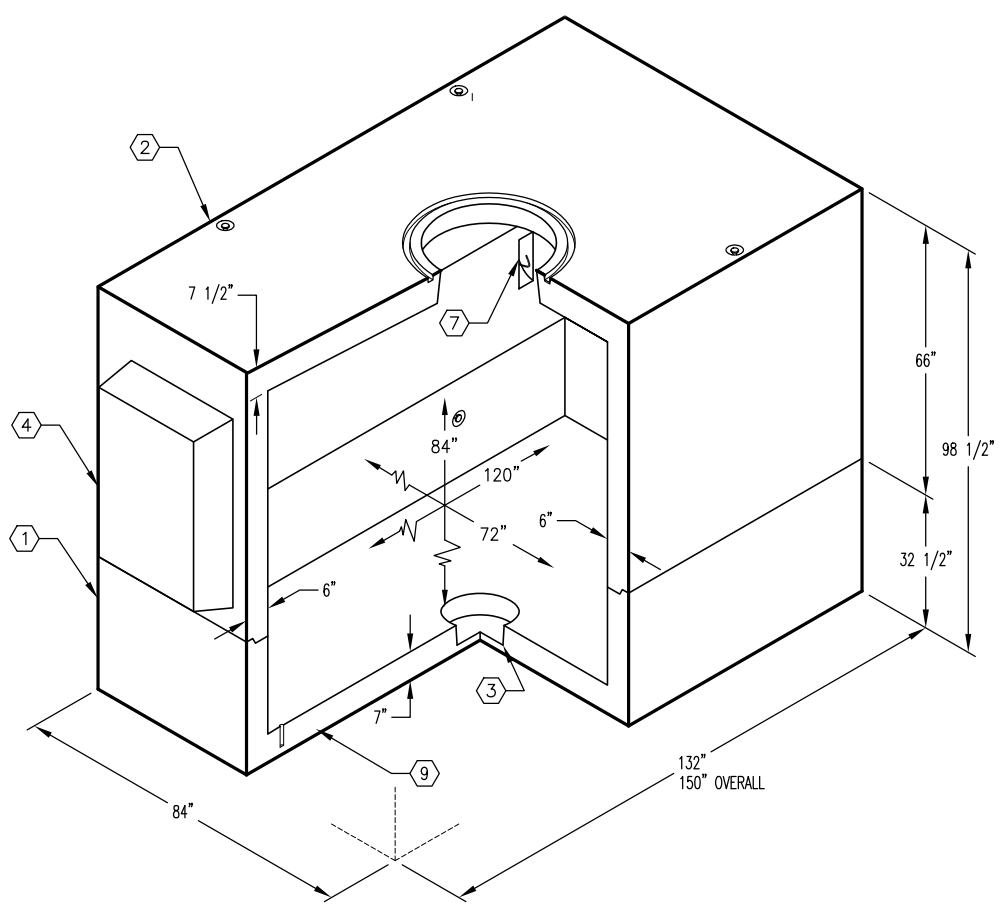

MINIMUM EXCAVATION SIZE:
8'–0" x 13'–6" x DEPTH REQ'D.

JENSEN PRECAST

AutoCAD REL 14

K610–DM84–21

PER CITY OF RIVERSIDE UGS 005 ITEM 3 03–01–02

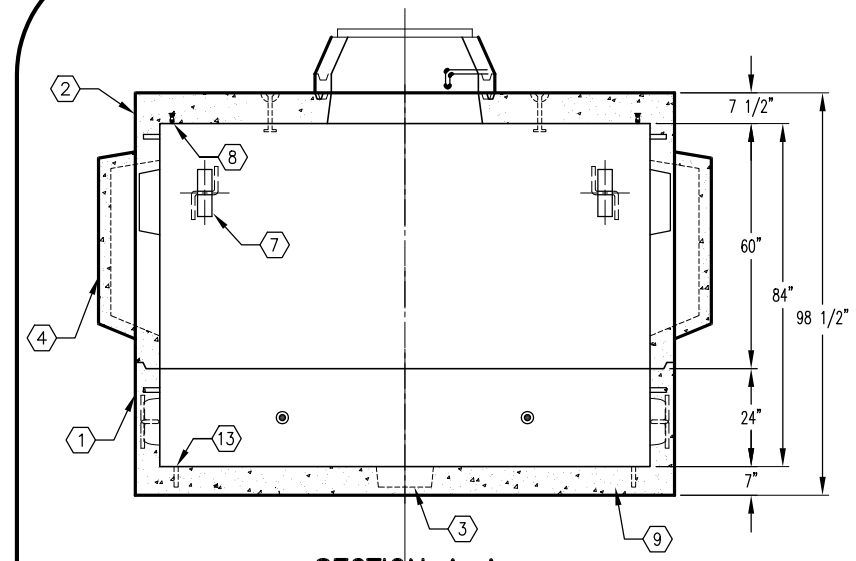

SECTION A–A

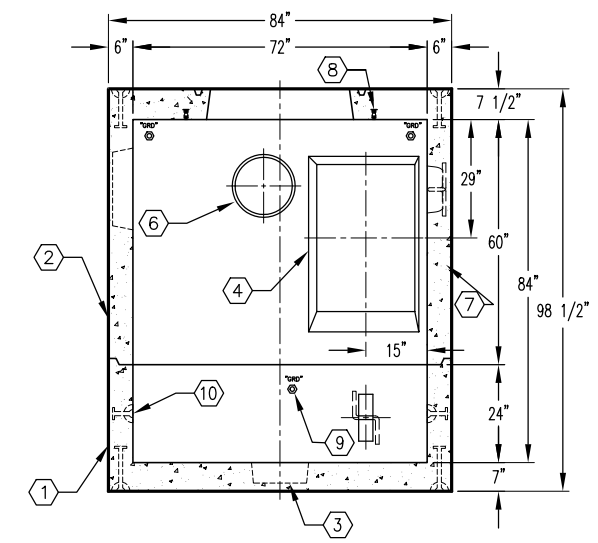

SECTION B–B

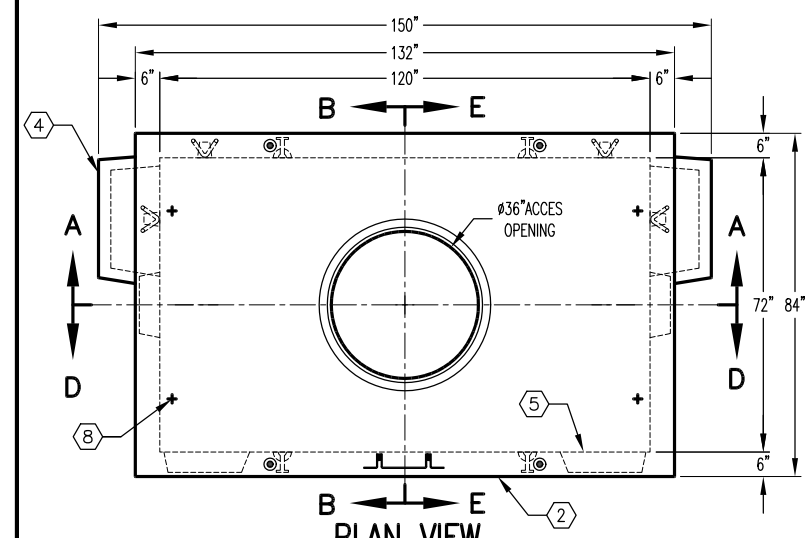

PLAN VIEW

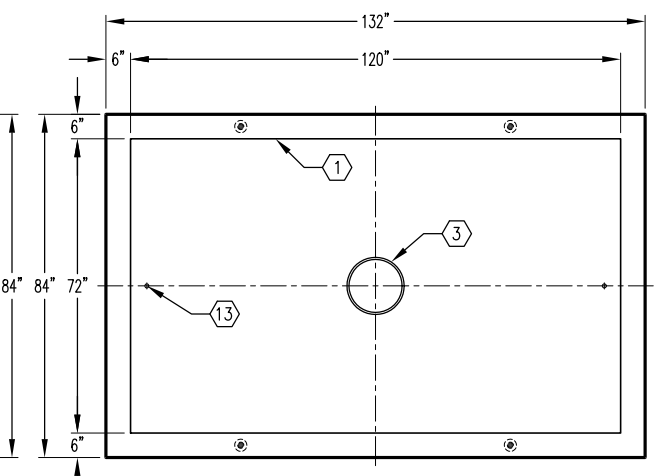

BOTTOM PLAN VIEW

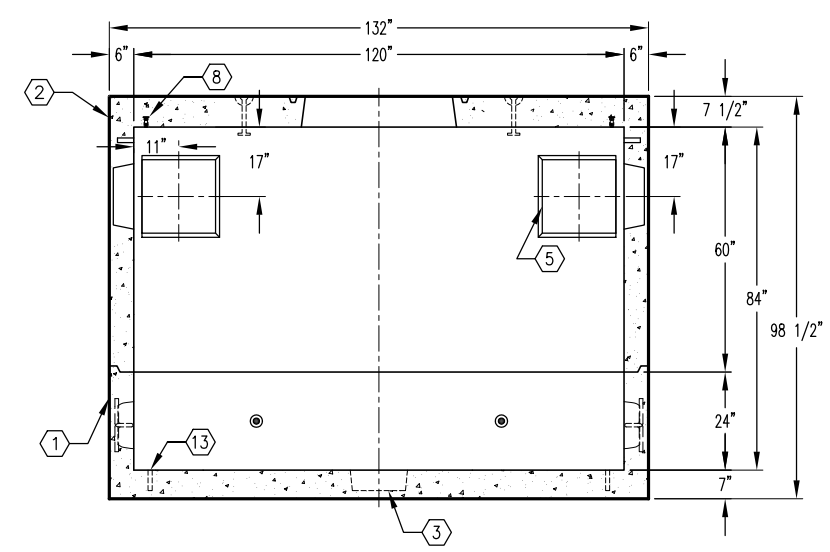

SECTION D–D

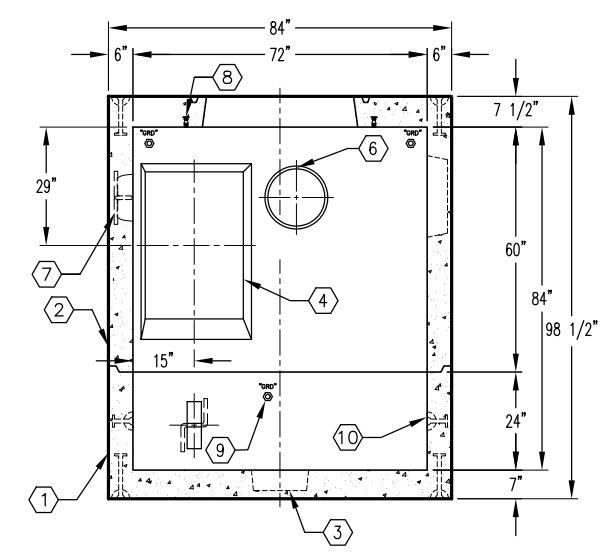

SECTION E–E

JENSEN PRECAST

#	DATE	DESCRIPTION	BY

K610–DM84–21

PER CITY OF RIVERSIDE UGS 005 ITEM 3 03–01–02