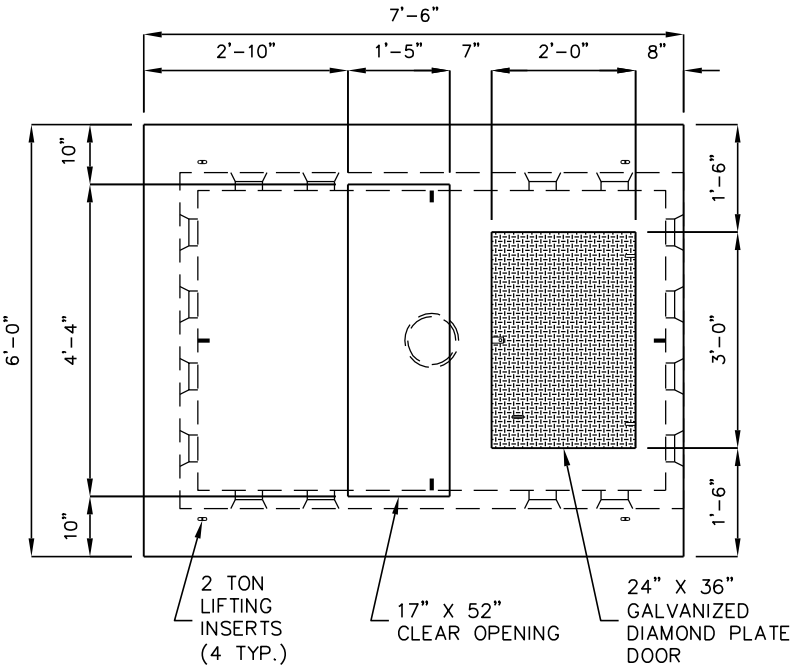

TOP VIEW

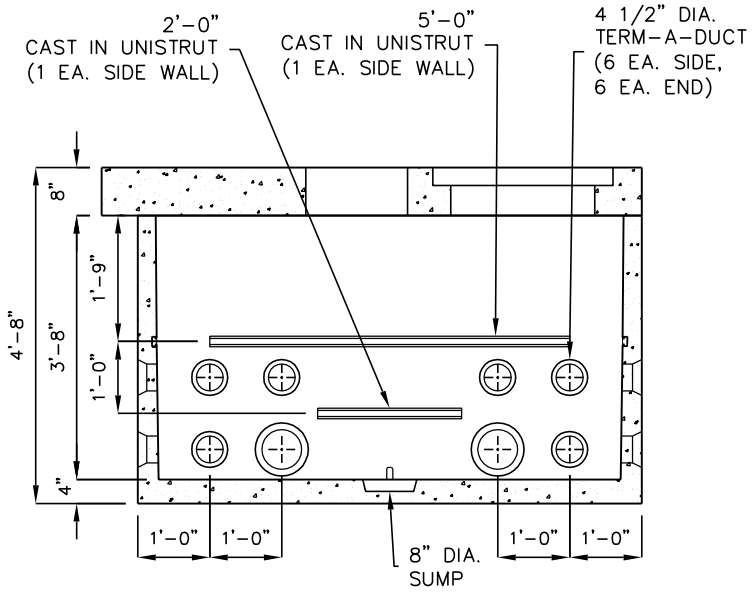

SIDE VIEW
(TYP.)

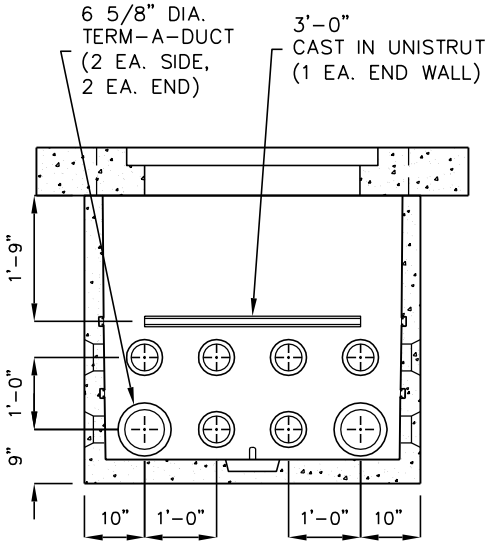

END VIEW
(TYP.)

9/18/02
CEC575_3P_bk.dwg
© 2002 Jensen Precast