612 VAULT

ARIZONA WATER COMPANY
PRESSURE REDUCING STATION
6'-0" x 12'-0" x 3'-11"
(INSIDE DIMENSIONS)

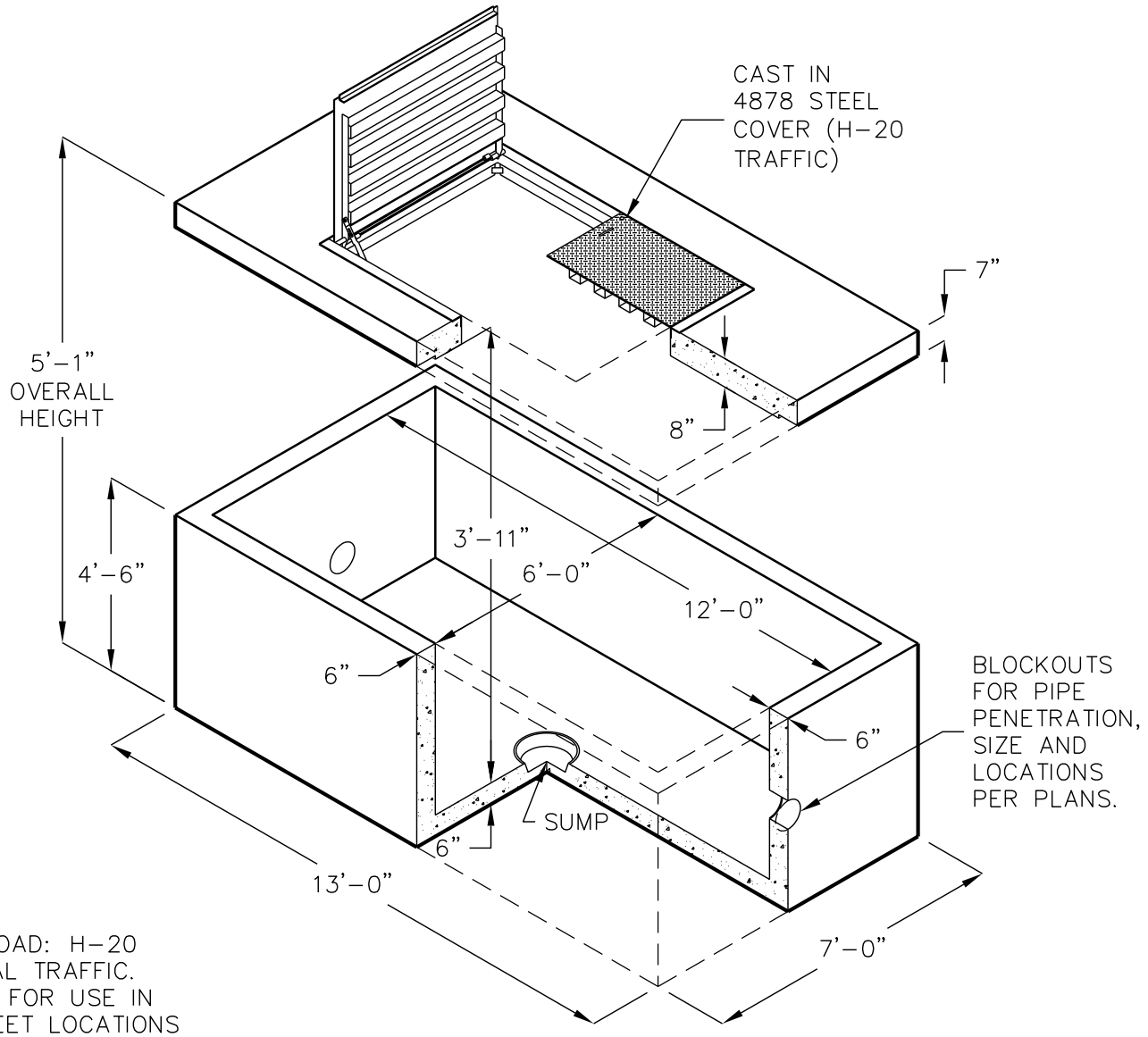

DESIGN LOAD: H-20
INCIDENTAL TRAFFIC.
SUITABLE FOR USE IN
OFF-STREET LOCATIONS
WHERE NOT SUBJECTED TO
HIGH DENSITY TRAFFIC.

FOR COMPLETE DESIGN
AND PRODUCT INFORMATION
CONTACT JENSEN PRECAST.

11/1/02
612x4_4878_AWC.dwg

© 2002 Jensen Precast

JENSEN PRECAST®